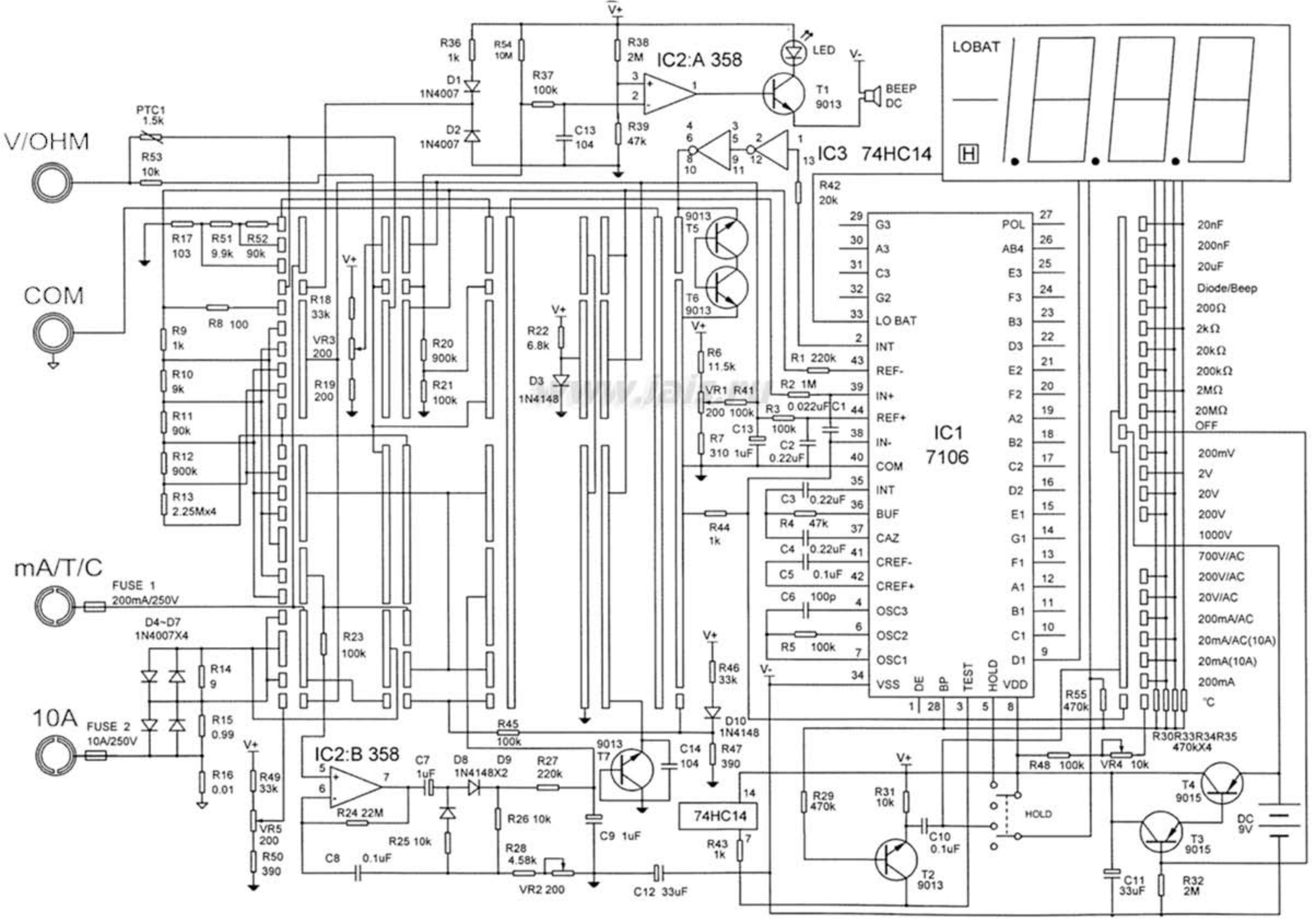
V/OHM
COM
mA/T/C
10A
PTC1 1.5k
R53 10k
R36 1k
D1 1N4007
D2 1N4007
R54 10M
R37 100k
C13 104
R38 2M
R39 47k
IC2:A 358
LED
T1 9013
BEEP DC
IC3 74HC14
LOBAT
H
R42 20k
R17 103
R51 9.9k
R52 90k
R8 100
R9 1k
R10 9k
R11 90k
R12 900k
R13 2.25Mx4
R18 33k
VR3 200
R19 200
R20 900k
R21 100k
R22 6.8k
D3 1N4148
9013 T5
T6 9013
R6 11.5k
VR1 200
R41 100k
R7 310
R44 1k
R1 220k
R2 1M
R3 100k
C1 0.022uF
C2 0.22uF
C13 1uF
C3 0.22uF
R4 47k
C4 0.22uF
C5 0.1uF
C6 100p
R5 100k
IC1 7106
G3
A3
C3
G2
LO BAT
INT
REF-
IN+
REF+
IN-
COM
INT
BUF
CAZ
CREF-
CREF+
OSC3
OSC2
OSC1
VSS
POL
AB4
E3
F3
B3
D3
E2
F2
A2
B2
C2
D2
E1
G1
F1
A1
B1
C1
D1
VDD
DE
BP
TEST
HOLD
20nF
200nF
20uF
Diode/Beep
200Ω
2kΩ
20kΩ
200kΩ
2MΩ
20MΩ
OFF
200mV
2V
20V
200V
1000V
700V/AC
200V/AC
20V/AC
200mA/AC
20mA/AC(10A)
20mA(10A)
200mA
°C
FUSE 1 200mA/250V
FUSE 2 10A/250V
D4~D7 1N4007X4
R14 9
R15 0.99
R16 0.01
R23 100k
R45 100k
IC2:B 358
R24 22M
R25 10k
C7 1uF
D8 1N4148X2
D9
R27 220k
R26 10k
R28 4.58k
VR2 200
C8 0.1uF
C9 1uF
C12 33uF
9013 T7
C14 104
R46 33k
D10 1N4148
R47 390
74HC14
R43 1k
R49 33k
VR5 200
R50 390
R29 470k
R31 10k
C10 0.1uF
T2 9013
HOLD
R55 470k
R48 100k
VR4 10k
R30R33R34R35 470kX4
T4 9015
T3 9015
DC 9V
C11 33uF
R32 2M