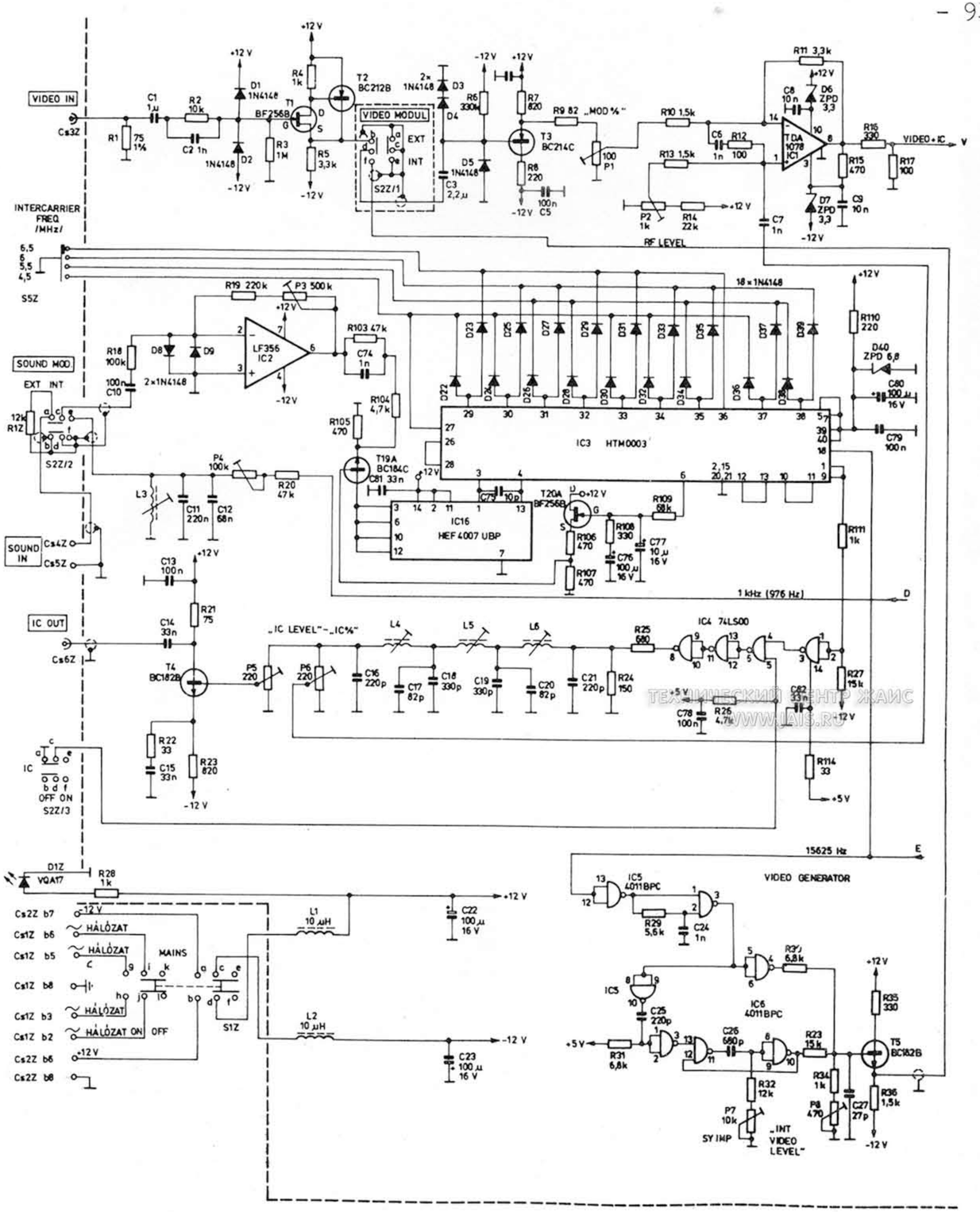
VIDEO IN
INTERCARRIER FREQ /MHz/
SOUND MOD.
SOUND IN
IC OUT
VIDEO MODUL
RF LEVEL
VIDEO+IC
IC3 HTM0003
IC16 HEF 4007 UBP
IC4 74LS00
„IC LEVEL"-„IC%"
VIDEO GENERATOR
MAINS
HÁLÓZAT
OFF ON
SY IMP
„INT VIDEO LEVEL"
1 kHz (976 Hz)
15625 Hz

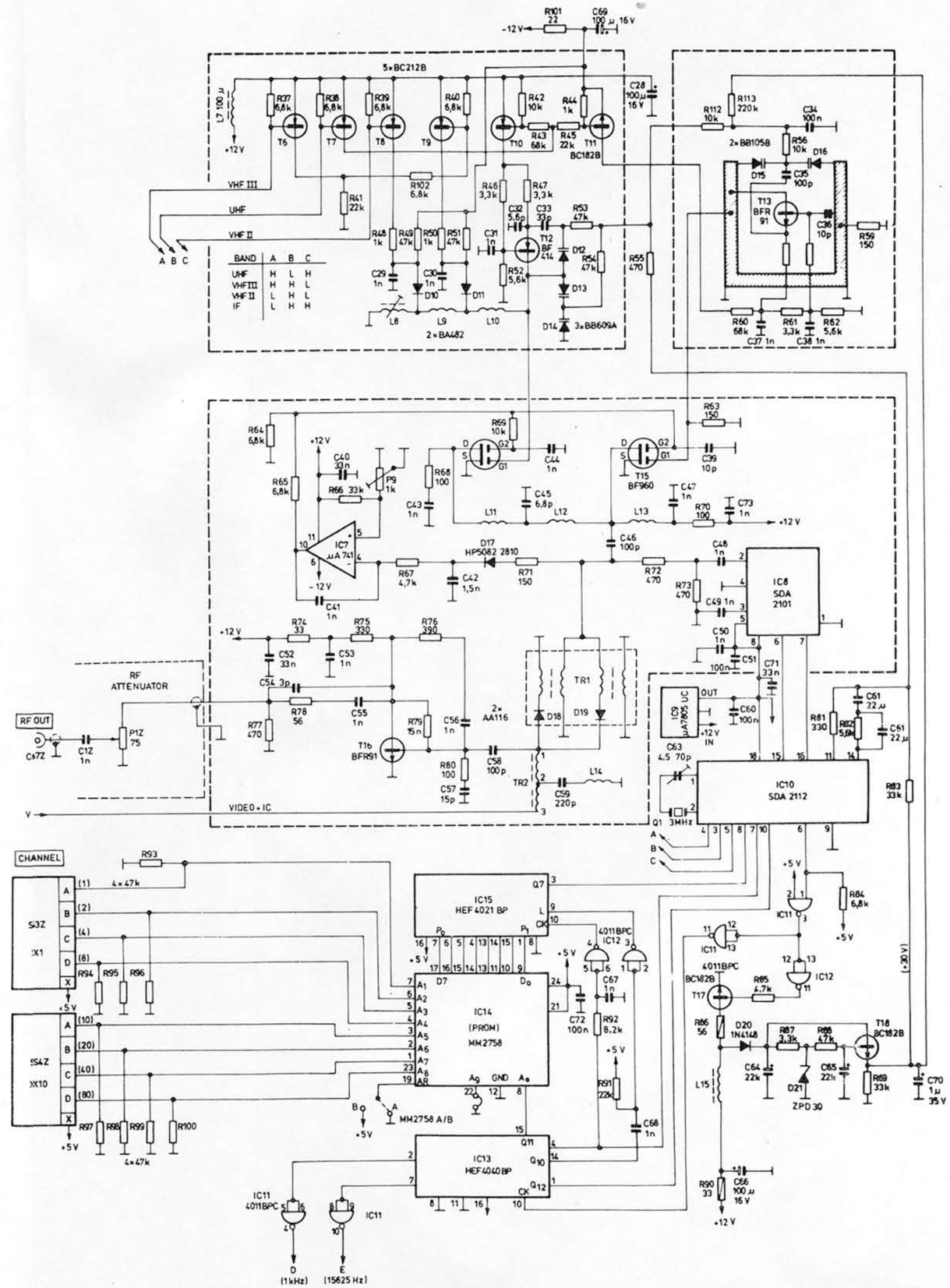
5×BC212B
VHF III
UHF
VHF II
BAND A B C
UHF H L H
VHF III H H L
VHF II L H L
IF L H H
2×BA482
3×BB609A
2×BB105B
RF ATTENUATOR
RF OUT
VIDEO+IC
IC8 SDA 2101
IC10 SDA 2112
CHANNEL
IC15 HEF 4021 BP
IC14 (PROM) MM2758
IC13 HEF 4040 BP
MM2758 A/B
(1kHz)
(15625 Hz)