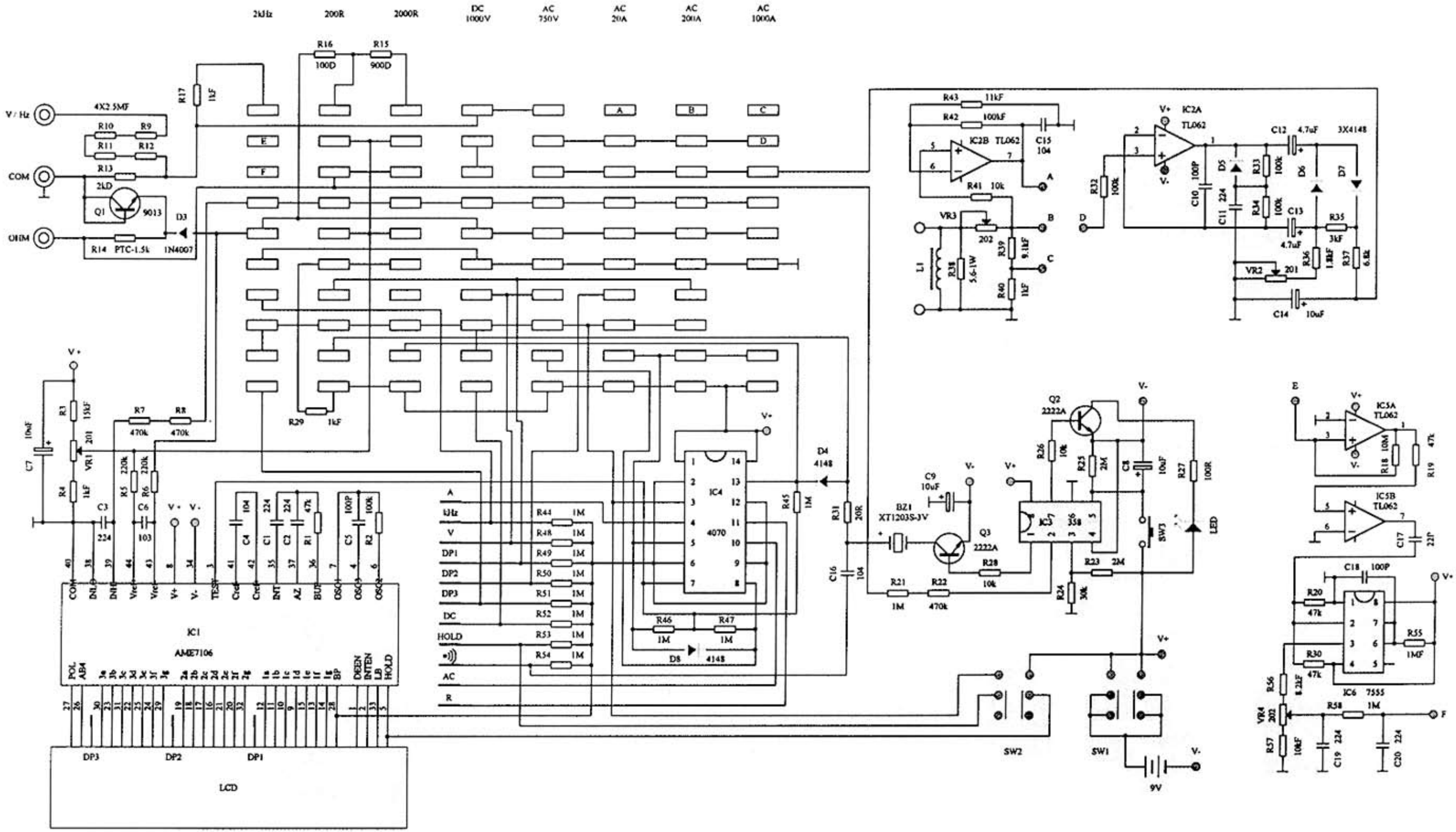

2kHz
200R
2000R
DC 1000V
AC 750V
AC 20A
AC 200A
AC 1000A
V / Hz
COM
OHM
4X2.5MF
R10
R9
R11
R12
R13
2kD
Q1
9013
D3
1N4007
R14 PTC-1.5k
R17 1kF
R16 100D
R15 900D
R29 1kF
A
B
C
D
E
F
R43 11kF
R42 100kF
IC2B TL062
C15 104
R41 10k
VR3 202
R39 9.1kF
R40 1kF
L1
R38 5.6-1W
IC2A TL062
C12 4.7uF
3X4148
R32 100k
C10 100P
C11 224
D5
R33 100k
R34 100k
D6
D7
C13 4.7uF
R35 3kF
R36 1.8kF
R37 6.8k
VR2 201
C14 10uF
V+
V-
R3 15kF
R7 470k
R8 470k
VR1 201
R4 1kF
C7 10uF
R5 220k
R6 220k
C3 224
C6 103
C4 104
C1 224
C2 224
R1 47k
C5 100P
R2 100k
IC1
AME7106
COM
INLO
INHI
Vref
Vref
V+
V-
TEST
Cref
Cref
INT
AZ
BUF
OSC1
OSC2
POL
AB4
DEEN
INTEN
LB
HOLD
DP3
DP2
DP1
LCD
A
kHz
V
DP1
DP2
DP3
DC
HOLD
AC
R
R44 1M
R48 1M
R49 1M
R50 1M
R51 1M
R52 1M
R53 1M
R54 1M
IC4
4070
R46 1M
R47 1M
D8 4148
D4 4148
R45 1M
R31 20R
C16 104
BZ1 XT1203S-3V
C9 10uF
Q3 2222A
R21 1M
R22 470k
R28 10k
Q2 2222A
R26 10k
R25 2M
C8 10uF
R27 100R
IC3 358
R23 2M
R24 30k
SW3
LED
SW2
SW1
9V
IC5A TL062
R18 10M
R19 47k
IC5B TL062
C17 22P
C18 100P
R20 47k
R30 47k
R55 1MF
IC6 7555
R56 8.2kF
VR4 202
R57 10kF
R58 1M
C19 224
C20 224