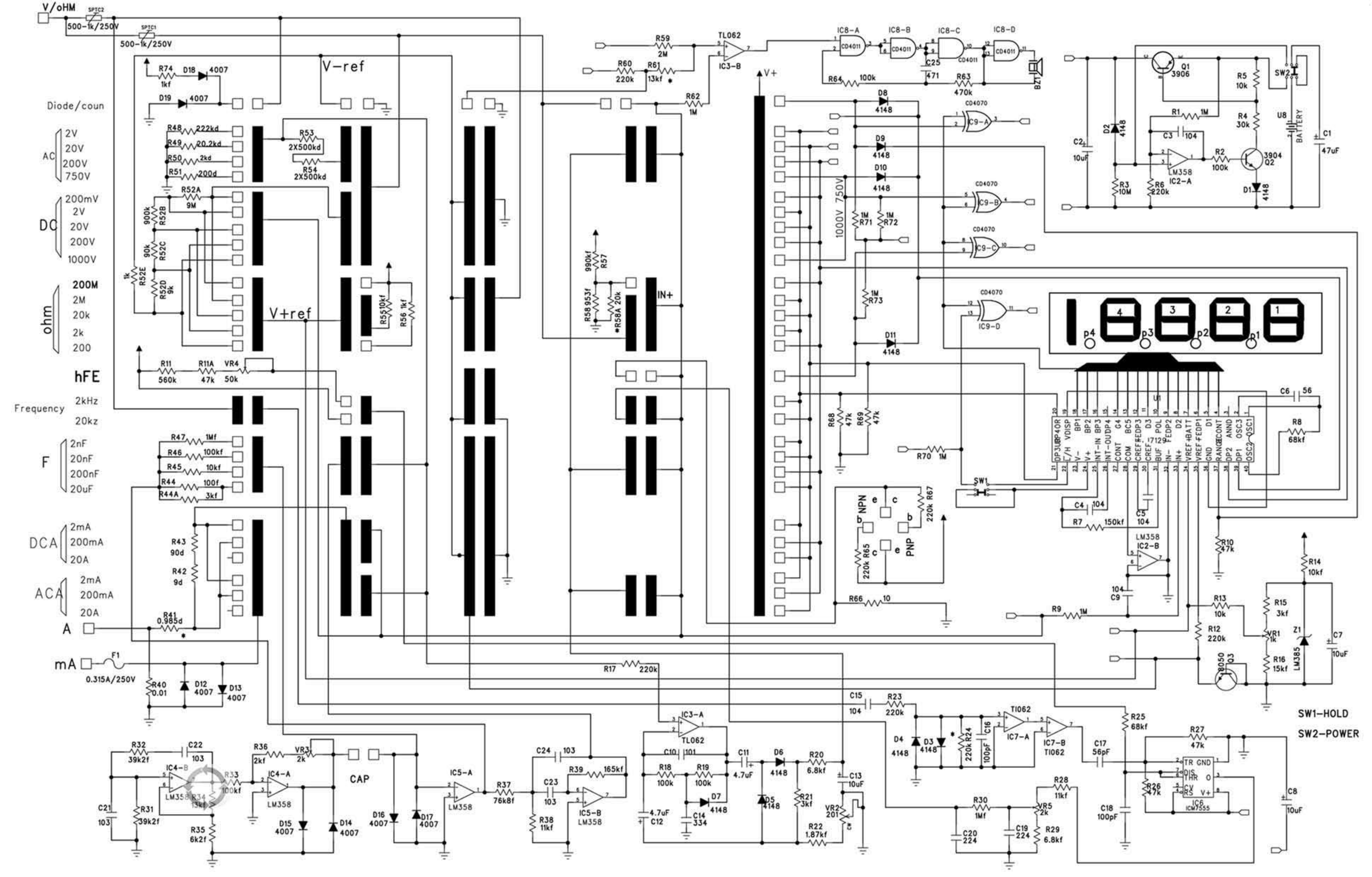
V/oHM
500-1k/250V
Diode/coun
AC
2V
20V
200V
750V
DC
200mV
2V
20V
200V
1000V
ohm
200M
2M
20k
2k
200
hFE
Frequency
2kHz
20kz
F
2nF
20nF
200nF
20uF
DCA
2mA
200mA
20A
ACA
2mA
200mA
20A
A
mA
0.315A/250V
V-ref
V+ref
V+
IN+
1000V 750V
CAP
NPN
PNP
SW1-HOLD
SW2-POWER
BATTERY
TL062
CD4011
CD4070
LM358
LM385
ICM7555