100

Brüel & Kjær

2610
Measuring Amplifier

Valid from serial no. 1078113

037-0351

2610

Service

2610
Measuring Amplifier

Valid from serial no. 1078113

037-0351

Consisting of:

	page	date
Service Instruction	0–1	12.83
- -	0–2	8.79
Checking Procedure	1–1	8.79
- -	1–2	8.79
- -	1–3	8.79
AC Amplifier	2–1	8.79
- -	2–3	8.79
Meter Circuit	3–1	8.79
- -	3–3	8.79
Front Panel Control	4–1	12.83
Parts List	5–1	8.79
Cabinet Parts	6–1	8.79
ZE 0263 Detector and Recorder Circuit	1	12.83
- - - - -	2	12.83
- Power Supply Circuit	3	12.83
- - - -	4	12.83
- Amplifier and Filter Circuit	5	12.83
- - - - -	6	12.83
- - - - -	7	12.83
- Main Board Circuit Diagram	9	12.83
ZH 0180 Amplifier and Input Circuit Control Board	1	1.79
ZH 0181 Filter and Detector Circuit Control Board	1	1.79

Trouble Shooting

If any faults should occur please check the instrument according to the Checking Procedure.

When a fault has been traced and corrected, the voltages and adjustments influenced by the correction must be rechecked. The complete instrument should then be tested to make sure that all basic fucntions are operative.

The tolerances given in these notes are intended for use as guide for adjustments.

Before correcting any apparent deviation make sure that the measuring instrument has tolerances small enough not to affect the measurement.

Modifications

Due to the constant technical progress the instrument will be modified from time to time in order to provide continously improved performance.

For this reason there may be small differencies between the instrument and the Service Instruction.

However, the local Representative Service is in possession of all information regarding the modifications that have been made.

Spare Parts

Please state type and serial number of the instrument when ordering spare parts.

Attention

The opening of the apparatus is likely to expose live parts. Any adjustment, maintenance or repair of the opened apparatus under voltage shall be carried out only by a skilled person who is aware of the hazards involved.

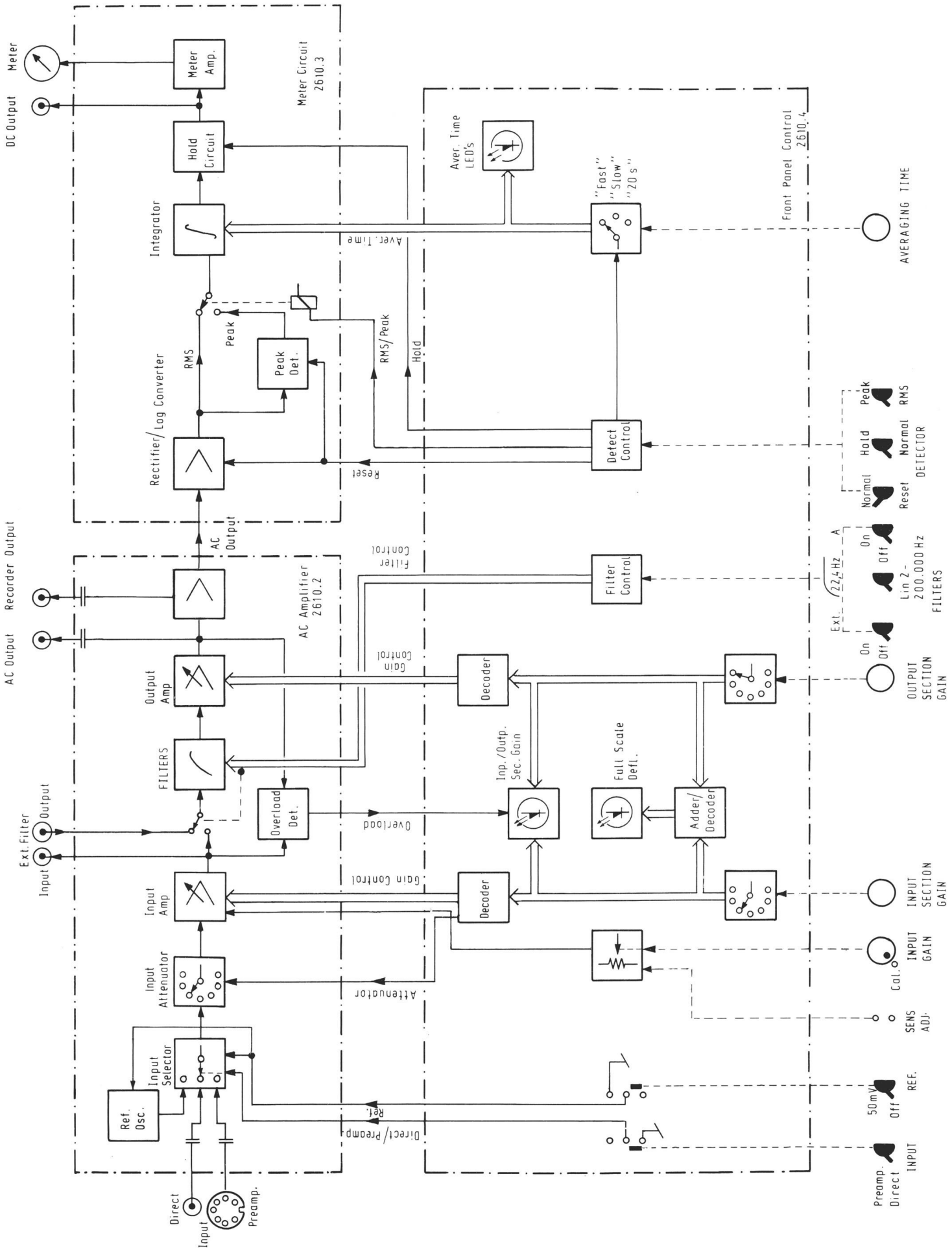
Meter
DC Output
Meter Amp.
Meter Circuit 2610.3
Hold Circuit
Integrator
Aver. Time
Aver. Time LED's
"Fast" "Slow" "20 s"
Front Panel Control 2610.4
AVERAGING TIME
Peak
RMS
Peak Det.
RMS/Peak
Hold
Rectifier/Log Converter
Reset
Detect Control
Peak
RMS
Hold
Normal
Normal
Reset
DETECTOR
AC Output
Recorder Output
AC Output
Filter Control
Filter Control
AC Amplifier 2610.2
On
Off
Ext.
224 Hz
A
Lin 2 - 200.000 Hz
FILTERS
Output Amp
Gain Control
Decoder
On
Off
OUTPUT SECTION GAIN
FILTERS
Inp./Outp. Sec. Gain
Full Scale Defl.
Ext. Filter
Output
Input
Overload Det.
Overload
Adder/ Decoder
Input Amp
Gain Control
Decoder
INPUT SECTION GAIN
Input Attenuator
Attenuator
INPUT GAIN
Cal.
SENS ADJ.
Input Selector
Ref. Osc.
Ref.
Direct/Preamp.
50mV
Off
REF.
Preamp.
Direct
INPUT
Direct
Input
Preamp.

1.1. Function Check

a. Sensitivity

VOLTAGE MULT.: "1"
INPUT SECTION GAIN: "100 mV"
INPUT GAIN: "Cal."
INPUT: "Direct"
REF.: "50 mV RMS"
FILTERS: "Ext., Off"
"Lin 2 — 200000 Hz"
"A,Off"
AVERAGING TIME: "FAST"
DETECTOR: "Normal"
"Normal"
"RMS"

On the rear panel
INPUT OVERLOAD INDICATOR: "10 V"

Meter reading: 50 mV
If necessary adj. "Direct Sens. Adj."

The Measuring Amplifier is now calibrated to read absolute voltage.

REF. to "Off"

Input signal to "Direct": 100 mV 1 kHz

Check the Meter reading: 100 mV ~ FSD

Check the AC voltage on the "AC Output" on the front panel: 1000 mV ± 40 mV

Check the AC voltage on the "AC Output" located on the rear panel: 1600 mV ± 64 mV

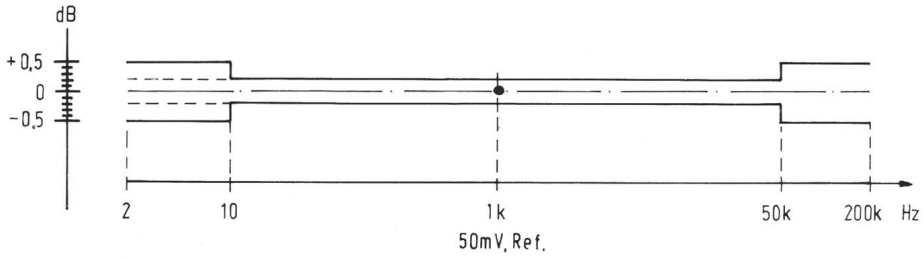

b. Frequency Response

FILTERS to "Ext., On"

Connect the "Ext. Filter Input" to "Ext. Filter Output"

Check the frequency response.
Tolerance as above.

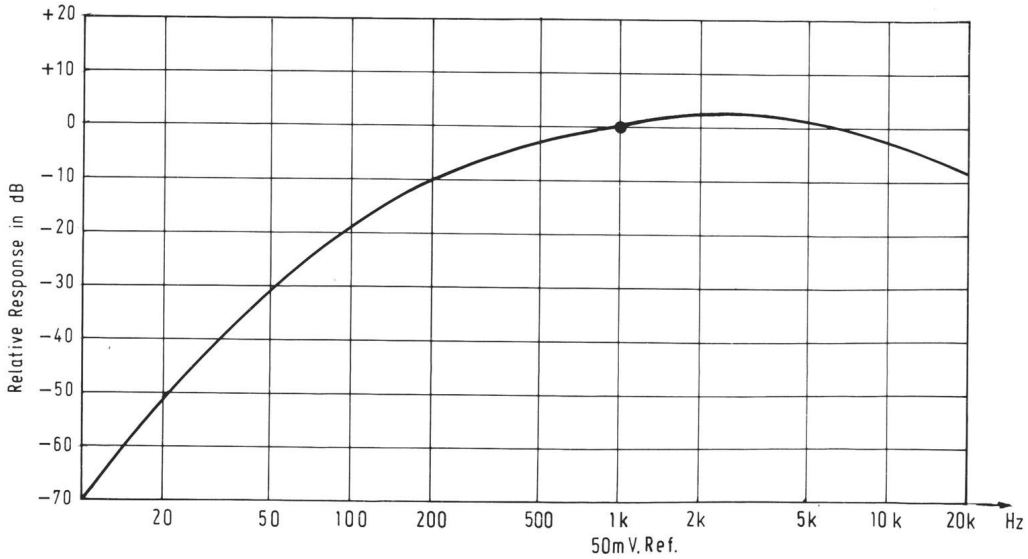

FILTERS to "Ext., Off"
"A,On"

Remove the connection between "Ext. Filter Input" and "Ext. Filter Output".

Check the "A" weighting function according to the curve.

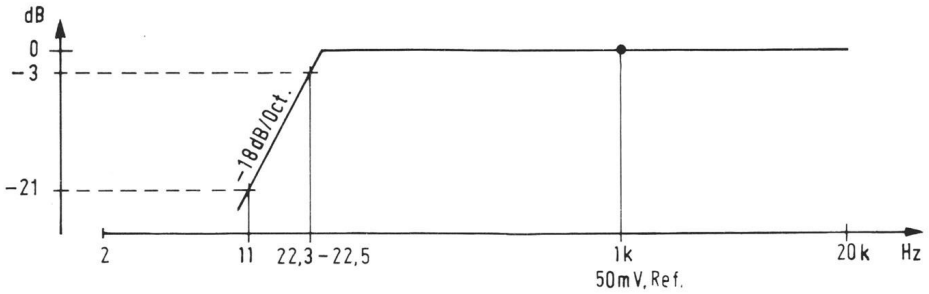

FILTERS to "A, Off"
"22,4 Hz"

Check the frequency response according to the curve

c. Attenuators

Input signal to "Direct" 50 mV 1 kHz

FILTERS to "Lin 2 — 200000 Hz"

Check the INPUT SECTION GAIN and VOLTAGE MULT. in 10 dB steps.
Tolerance: ± 0,1 dB.
Check the range of INPUT GAIN: > 10 dB

d. RMS Detector

Change the input voltage to 100 mV ~ FSD

INPUT SECTION GAIN to "100 mV"
VOLTAGE MULTIPLIER to "1"
INPUT GAIN to "Cal."

Check the voltage on the "DC Output" on the rear panel. 5000 mV ± 100 mV

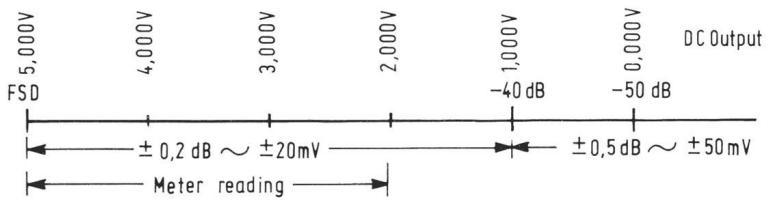

Check the Meter reading: Tolerance as above

Change the input voltage to 50 mV

DETECTOR to "Peak"

Check that the Meter reading increase by 3 dB.

DETECTOR to "Hold"

Disconnect the input signal
Check the rate of decay: < 0,2 dB/min.

Reconnect the input signal.

Push "Reset"
Check that there is a small delay before reset of the meter reading appears.

DETECTOR to "Normal"
"RMS"

Change the input signal to 100 mV
Check the rate of decay for AVERAGING TIME: "Fast": 34,8 dB/s TC = 0,25 s
"Slow": 4,4 dB/s TC = 2 s
"20 secs": 0,43 dB/s TC = 20 s

e. Overload

Check that the range indicators start flashing when the input voltage is increased to approx. 700 mV.

f. Noise

Short circuit "Direct" input.

FILTERS to "22,4"
INPUT SECTION GAIN to "3 mV"
VOLTAGE MULT. to "0,003"

Check the internal noise of the instrument

Broadband < 5 μV

FILTERS to "A, On"

"A" weighted < 1,5 μV

1.2. Acoustical Calibration

INPUT: "Preamp." FILTERS: "Ext., Off" "Lin 2 — 200000 Hz" "A, Off" INPUT SECTION GAIN: "3 V" VOLTAGE MULT.: "1" INPUT GAIN: "Cal." REF.: "Off" POL. VOLT.: "200 " DETECTOR: "Normal" "Normal" "RMS" AVERAGING TIME: "Fast"	Connect a Microphone Preamplifier to the "Preamp." input. Use a Microphone Cartridge with a sensitivity of 50 mV/Pa. Adjust " Preamp. Sense Adj." to the correction factor the microphone — preamplifier combination used. Use meter scale SA 0239 Apply the signal from a Pistonphone Type 4220 to the microphone. Meter reading: 124 dB ± the correction for the Pistonphone
POL. VOLT. to "28 V"	Check that the sensitivity of the system decreases by approx. 17 dB. The decay in sensitivity is quite slow.

2.1. Adjustment

a.	Frequency Response, Output Section	Input signal to "External Filter, From Output": 1 kHz
	INPUT SECTION GAIN: "300 mV" VOLTAGE MULT.: "1" INPUT: "Direct" REF.: "Off" INPUT GAIN: "Cal." POL. VOLT: "200 V" FILTERS: "Ext. On" "Linear 2 — 200000 Hz" "A Off" AVERAGING TIME: "Fast" DETECTOR: "Normal" "Normal" "RMS"	Adjust input voltage for 1000 mV on "AC Output". Change the input frequency to 200 kHz. Check the voltage on "AC Output": 1025 mV If necessary adjust L1
	VOLTAGE MULT., to: "0,1"	Reduce input signal by 20 dB Same procedure as above, but adjust C165 for 1025 mV on "AC Output"
	VOLTAGE MULT., to: "1"	Adjust the input voltage at 1 kHz for 1000 mV on "AC Output" Change the input frequency to 200 kHz. Check the voltage on "DC Output": 5000 mV, + 0, —10 mV If necessary adjust L2.
b.	Frequency Response, Input Section	Input signal to "Direct Input": 50 kHz
	FILTERS, to: "Ext. Off"	Adjust input voltage for 300 mV on "AC Output"
	INPUT SECTION GAIN, to: "1 V"	Check voltage on "AC Output": 100,0 mV If necessary adjust C166.
c.	A-Filter	Adjust the input voltage (at 1 kHz) for 20 dB deflection on the built in meter.
	FILTERS, to: "A On"	Check the meter deflection: 20 dB ± 0,1 dB If necessary adjust P4.
d.	Reference Oscillator	Input signal: 1,0 kHz, 50,0 mV
	FILTER, to: "A Off" INPUT SECTION GAIN, to: "100 mV"	Adjust "Sens. Adj. Direct" for a meter deflection of 50,0 mV. The adjustment potentiometer "Sens. Adj. Direct" should have an adjustment range of 10 — 12 dB
	REF., to: "50 mV RMS"	Meter deflection 50,0 mV If necessary adjust P2.
e.	Polarization Voltage	Check voltage of V7 emitter: 200,0 V If necessary adjust P5.

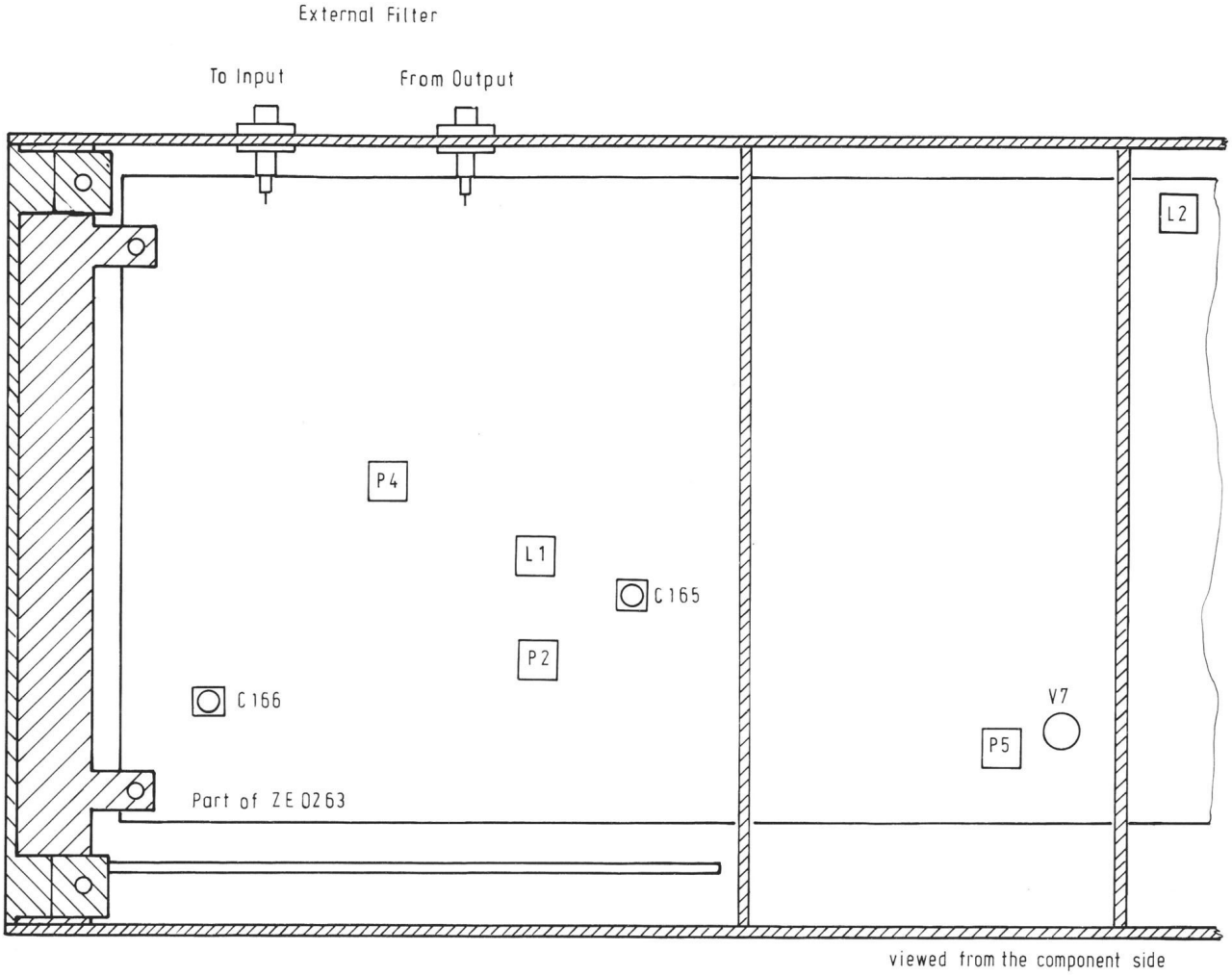
External Filter
To Input
From Output
L2
P4
L1
C165
P2
C166
V7
P5
Part of ZE 0263
viewed from the component side

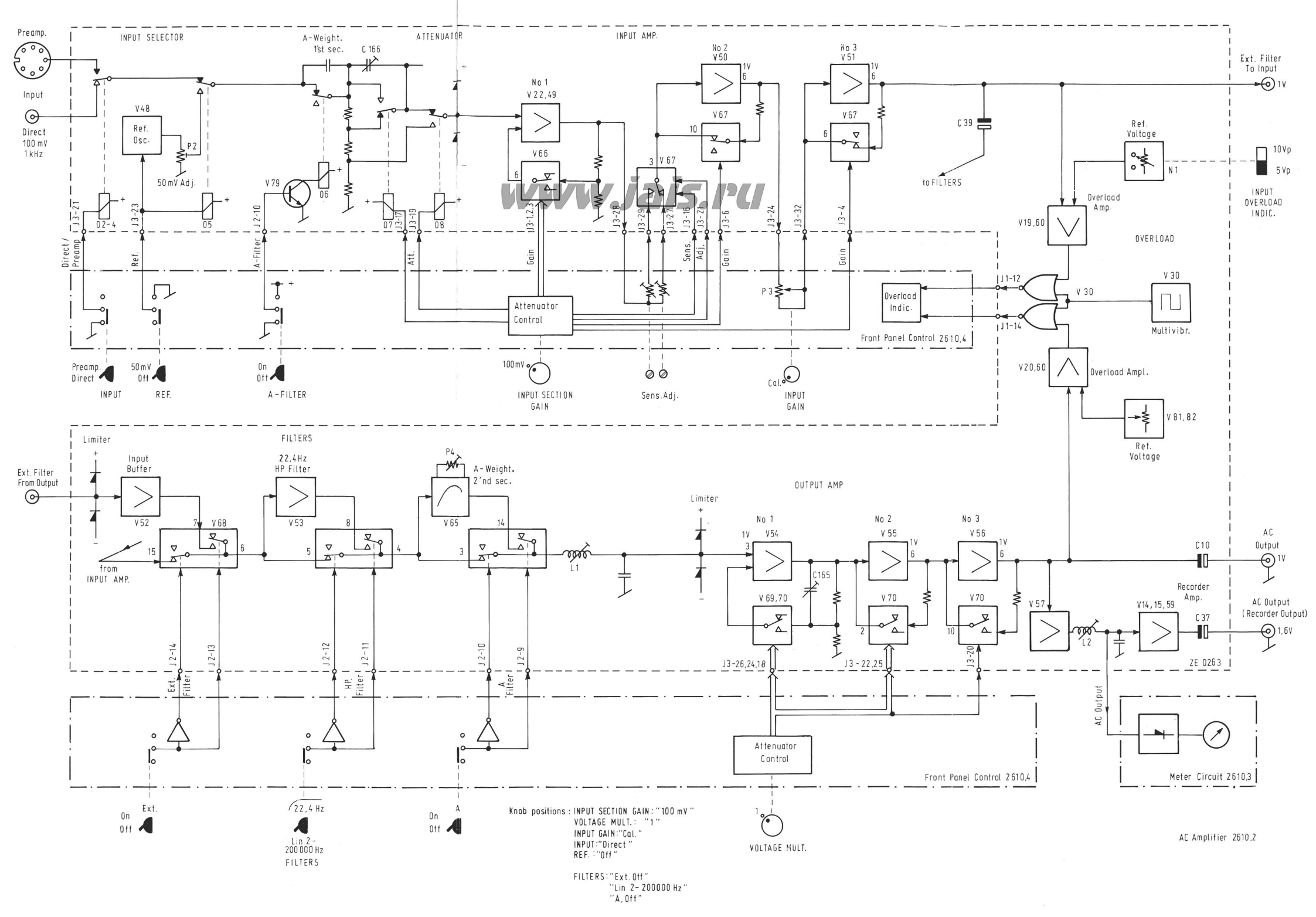
Preamp.
Input
Direct 100 mV 1kHz
INPUT SELECTOR
A-Weight. 1st sec.
C 166
ATTENUATOR
INPUT AMP.
No 1 V 22,49
No 2 V50
No 3 V51
V48
Ref. Osc.
P2
50 mV Adj.
V79
V66
V67
C39
to FILTERS
Ext. Filter To Input
1V
Ref. Voltage
N1
10Vp
5Vp
INPUT OVERLOAD INDIC.
Overload Amp.
V19,60
OVERLOAD
V 30
Multivibr.
Overload Indic.
Attenuator Control
Front Panel Control 2610,4
V20,60
Overload Ampl.
V 81, 82
Ref. Voltage
Direct / Preamp
Ref.
A-Filter
Att.
Gain
Sens. Adj.
Preamp. Direct
50 mV Off
On Off
INPUT
REF.
A-FILTER
100mV
INPUT SECTION GAIN
Sens.Adj.
Cal.
INPUT GAIN
Limiter
Input Buffer
V52
V68
from INPUT AMP.
FILTERS
22,4Hz HP Filter
V53
P4
A-Weight. 2'nd sec.
V65
L1
OUTPUT AMP
No 1 V54
No 2 V 55
No 3 V56
C165
V 69,70
V 70
V 57
L2
V14, 15, 59
C 37
C10
AC Output
Recorder Amp.
AC Output (Recorder Output)
1,6V
ZE 0263
Ext. Filter From Output
Ext. Filter
HP. Filter
A Filter
J3-26,24,18
J3 - 22,25
J3-20
AC Output
Meter Circuit 2610,3
On Off
Ext.
22,4 Hz
Lin 2-200 000 Hz
FILTERS
A
VOLTAGE MULT.
Knob positions : INPUT SECTION GAIN: "100 mV"
VOLTAGE MULT.: "1"
INPUT GAIN: "Cal."
INPUT: "Direct"
REF.: "Off"
FILTERS: "Ext. Off"
"Lin 2-200000 Hz"
"A, Off"
AC Amplifier 2610,2
www.jais.ru

3.1. Adjustment

a. Rectifier

INPUT SECTION GAIN: "100 mV"
VOLTAGE MULT.: "1"
INPUT GAIN: "Cal."
INPUT: "Direct"
REF.: "Off"
AVERAGING TIME: "Fast"
FILTERS: "Ext. Off"
"Lin. 2 — 200000 Hz"
"A. Off"
DETECTOR: "Normal"
"Normal"
"RMS"

Input signal to "Direct Input" 316 μV, 1 kHz

Connect an oscilloscope to TP1 and check the negative rectified signal. Tolerance: ± 2 mV between the tops.
If necessary adjust P10.

Change the input voltage to 316 mV.

Tolerance: ± 1 mV between the tops
If necessary adjust P9.

Connect a Digital Voltmeter to "DC Output".

Change the input voltage from 31,6 mV to 10 mV and note the change in mV as reference.
Change the input voltage from 1 mV to 316 μV and note the change in mV.

Difference from reference reading: ± 5 mV
If necessary adjust P12.

Change the input voltage from 315 mV to 100 mV RMS and note the change in mV.

Difference from the reference reading: ± 5 mV
If necessary adjust P1.

b. Gain of DC Amp.

Adjust the input voltage for 1000 mV ± 5 mV on "AC Output".

Decrease the input voltage by 50 dB.
Check the voltage on "DC Output": 0 V
Tolerance: ± 2 mV
If necessary adjust P8

Increase the input voltage by 50 dB
Check the voltage on "DC Output": 5 V
Tolerance: ± 5 mV
If necessary adjust P7

c. Linearity

As the adjustments of the potentiometers influence each others check the linearity in steps of 10 dB.
"DC Output" voltage should change 1 V ± 10 mV per step.
If necessary repeat the adjustment a and b.

d. Peak Detector

Adjust the input voltage for 4000 mV ± 2 mV on "DC Output"

DETECTOR to "Peak"

Check the voltage on "DC Output": 4301 mV ± 5 mV.
If necessary adjust P11

e. Meter Amp.

Adjust the mechanical zero at the moving coil instrument to 0 on the dB scale.

Power to "Off"

Power to "On"

Adjust the input voltage for 2000 V ± 2 mV on "DC Output"

Check the DC voltage in TP3 to 0 V ± 10 mV.
If necessary adjust P6.

Increase the input voltage by 30 dB
Meter deflection: "30 dB"
If necessary adjust P3

f. Hold Circuit

Check that the "DC Output" voltage and Meter deflection remain on the peak value.
Decay rate 5 mV/15 s.

DETECTOR to "Hold"
DETECTOR to "RMS"

Press "Reset" and check that the meter deflection drops to the RMS value.

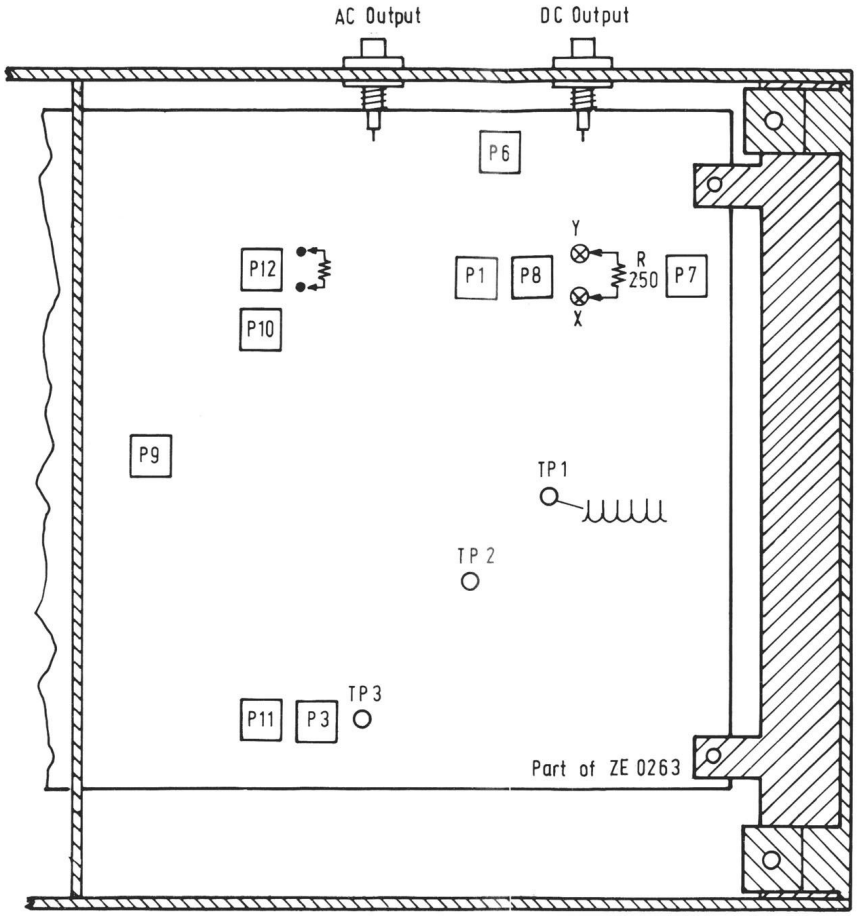

viewed from the component side

Averaging Time Table

V31	AVERAGING TIME			
Pin no.	Fast C 123,131	Slow C 121, 122	20 s C 124, 125	Peak C 140
11	1	1	0	1
10	1	0	1	1
9	0	1	1	1

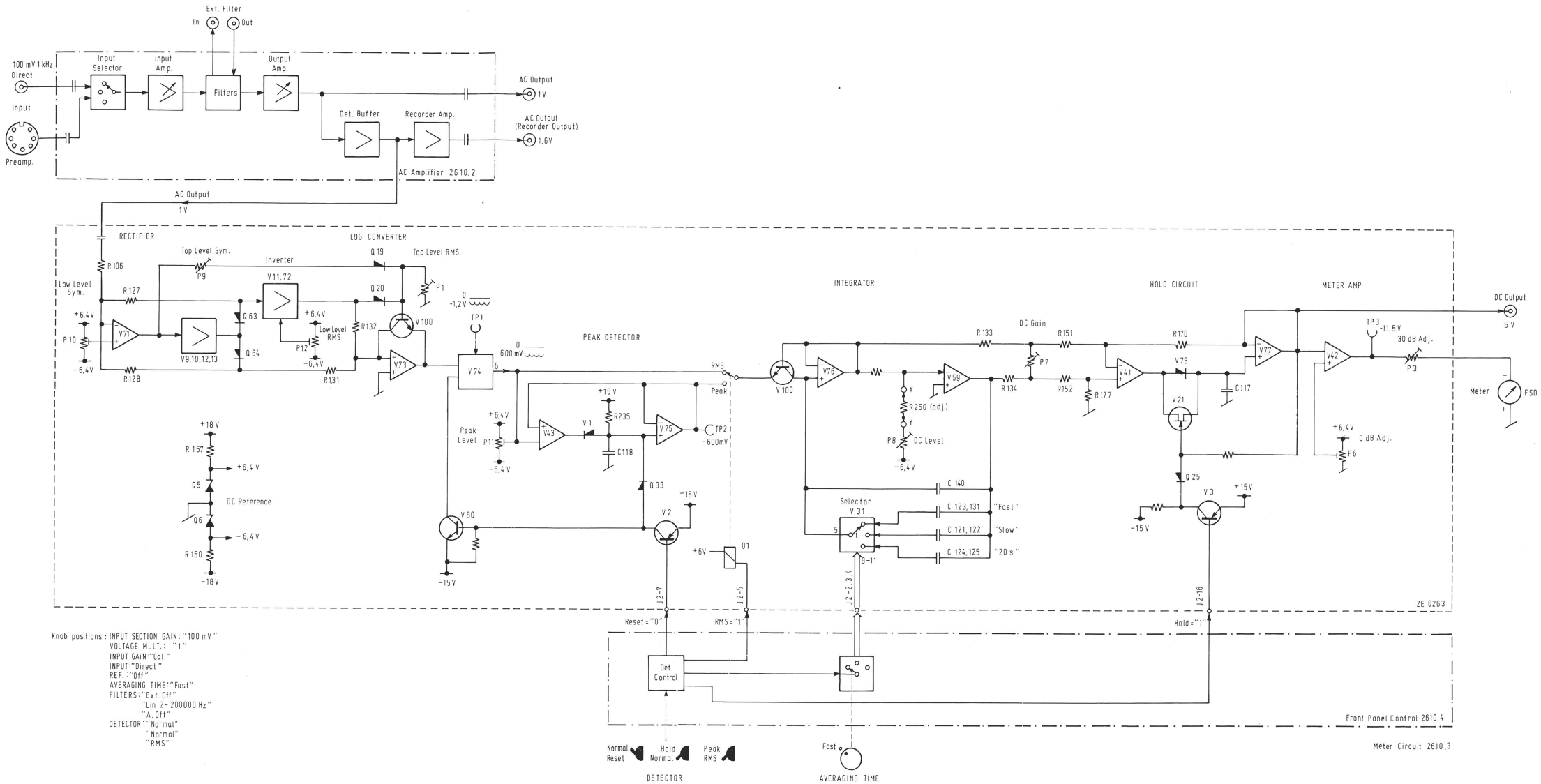

Knob positions : INPUT SECTION GAIN: "100 mV"
VOLTAGE MULT.: "1"
INPUT GAIN: "Cal."
INPUT: "Direct"
REF.: "Off"
AVERAGING TIME: "Fast"
FILTERS: "Ext. Off"
"Lin 2-200000 Hz"
"A, Off"
DETECTOR: "Normal"
"Normal"
"RMS"

Front Panel Control

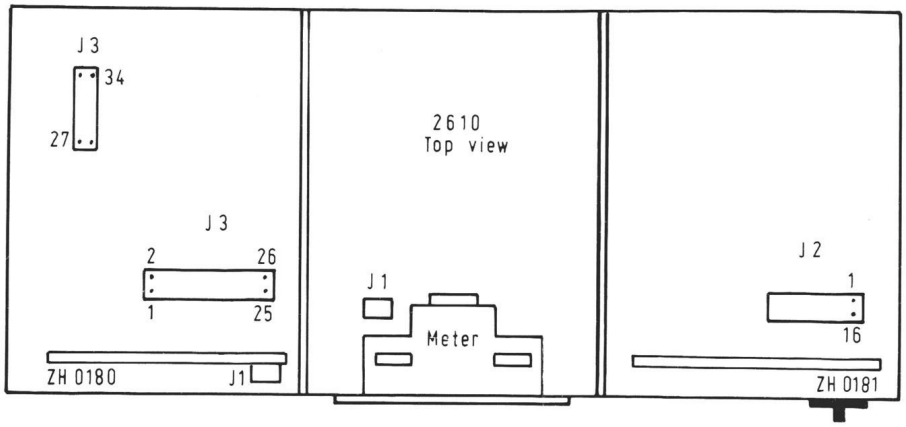

The Front Panel Control may be tested according to the Tables in order to trace a malfunction in a certain section.

Input Section Gain Table

J 3	INPUT SECTION GAIN								
Pin no.	dB 50	40	30	20	10	0	-10	-20	-30
1	1	1	1	1	0	1	0	1	0
2	1	1	1	0	1	0	1	0	1
3	0	0	0	1	1	1	1	1	1
4	1	0	0	0	0	0	0	0	0
6	1	1	0	0	0	0	0	0	0
17	0	0	0	0	0	1	1	1	1
19	0	0	0	0	0	0	0	1	1

Voltage Multiplier Table

J 3	VOLTAGE MULTIPLIER					
Pin no.	1	0,3	0,1	0,03	0,01	0,003
18	1	1	0	0	0	0
20	0	0	0	0	0	1
22	0	0	0	1	1	1
24	1	0	1	1	1	1
25	0	0	0	0	1	1
26	0	1	1	1	1	1

Input Function Table

J 3	INPUT FUNCTION		
Pin no.	Direct	Preamp.	Ref.
16	1	0	1
21	0	1	1
23	1	1	0

Valid from serial no. 1078113

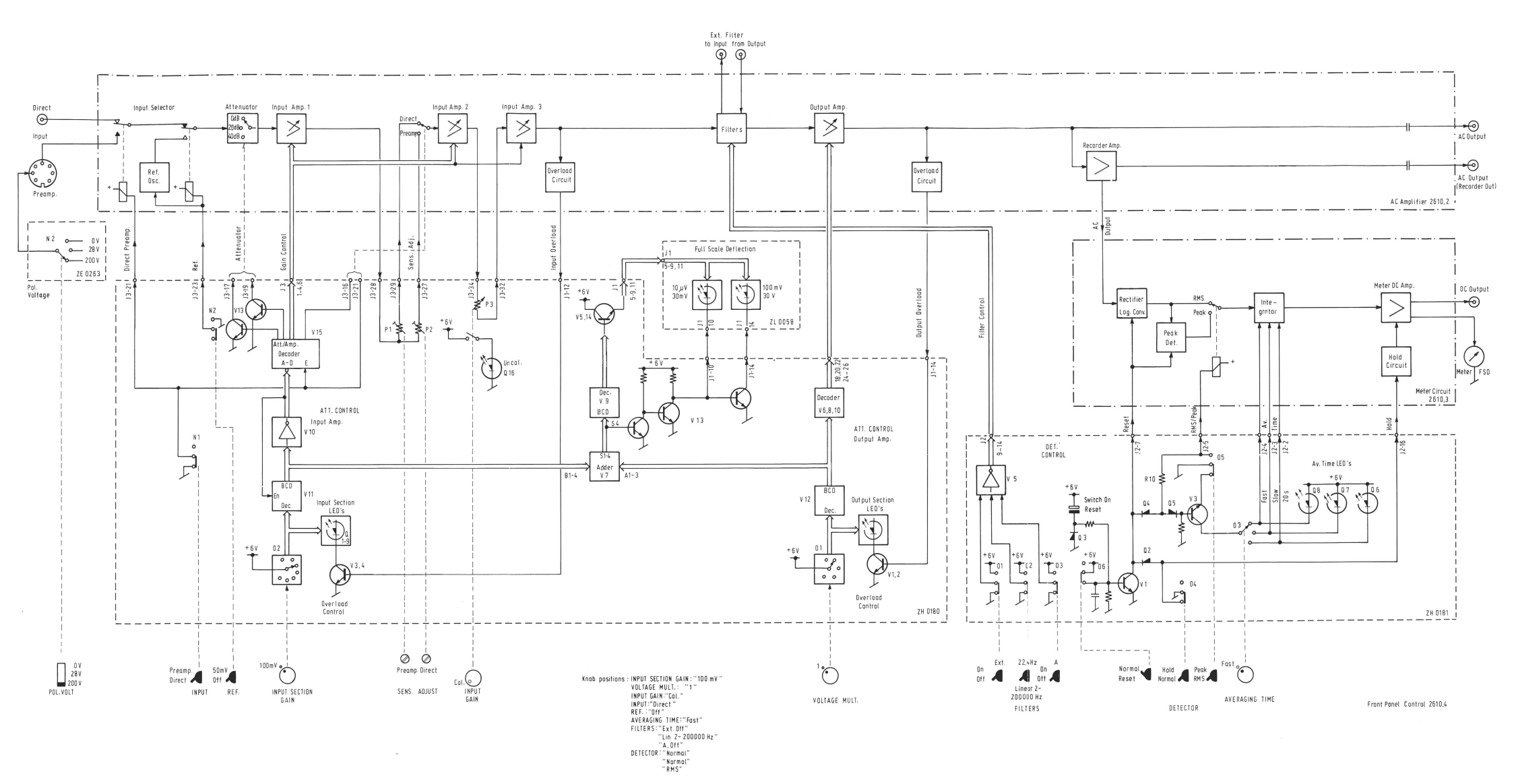
Ext. Filter
to Input from Output
Direct
Input
Preamp.
Input Selector
Attenuator
0dB
20dB
40dB
Input Amp. 1
Direct
Preamp
Input Amp. 2
Input Amp. 3
Filters
Output Amp.
Recorder Amp.
AC Output
AC Output
(Recorder Out)
AC Amplifier 2610,2
Ref.
Osc.
Overload
Circuit
Overload
Circuit
N 2
0 V
28 V
200 V
ZE 0263
Pol.
Voltage
Direct Preamp
Ref.
Attenuator
Gain Control
Sens. Adj.
Input Overload
Output Overload
Filter Control
AC
Output
Full Scale Deflection
10 µV
30 mV
100 mV
30 V
ZL 0058
Att./Amp.
Decoder
A-D
E
V 15
V13
P1
P2
P3
Uncal.
Q 16
V5,14
Dec.
V 9
BCD
S4
V 13
Decoder
V6,8,10
ATT. CONTROL
Input Amp.
V 10
ATT. CONTROL
Output Amp.
S1-4
Adder
V 7
B1-4
A1-3
BCD
En
Dec.
V 11
Input Section
LED's
Q
1-9
V3,4
Overload
Control
V 12
BCD
Dec.
Output Section
LED's
V1,2
Overload
Control
ZH 0180
Rectifier
Log. Conv.
RMS
Peak
Peak
Det.
Inte-
grator
Meter DC Amp.
DC Output
Hold
Circuit
Meter FSD
Meter Circuit
2610,3
Reset
RMS/Peak
Av.
Time
Hold
DET.
CONTROL
V 5
Switch On
Reset
Q3
R10
Q4
Q5
V3
Q2
V1
Q4
Q3
Av. Time LED's
Fast
Slow
20s
Q8
Q7
Q6
ZH 0181
0 V
28 V
200 V
POL. VOLT
Preamp.
Direct
INPUT
50mV
Off
REF.
100mV
INPUT SECTION
GAIN
Preamp. Direct
SENS. ADJUST
Cal.
INPUT
GAIN
1
VOLTAGE MULT.
On
Off
Ext.
22Hz
Linear Z-
200000 Hz
On
Off
A
FILTERS
Normal
Reset
Hold
Normal
Peak
RMS
DETECTOR
Fast
AVERAGING TIME
Knob positions : INPUT SECTION GAIN: "100 mV"
VOLTAGE MULT.: "1"
INPUT GAIN: "Cal."
INPUT: "Direct"
REF.: "Off"
AVERAGING TIME: "Fast"
FILTERS: "Ext. Off"
"Lin Z- 200000 Hz"
"A. Off"
DETECTOR: "Normal"
"Normal"
"RMS"
Front Panel Control 2610,4

Miscellaneous

C 1-4	Polycarbonate		10 nF/400 V		CS 0101
C 5	-		1 μF/100 V		CS 0336
R 1	Metal	1/4 W	1%	105 kΩ	RF 5105

4-pin Socket with cable (Moving Coil Instr.)	AQ 1170
7-pin Socket with cable (Preamp. Input)	AQ 1171
3-pin Socket with cable (Direct Input)	AQ 1172
2-pin Socket with cable	AQ 1173
2-pin Socket with cable (From Output)	AQ 1174
2-pin Socket with cable (Preamp. Input)	AQ 1175
Moving Coil Instrument	IM 0072
Coax Socket	JJ 0108
BNC Socket	JJ 0130
Pramp. Socket	JJ 0705
Binding Post	JK 6272
Lamp Clamp	JO 0028
Fuse Socket	JS 0037
Banana Socket	JT 6204
"Pol. Volt." Switch	NN 0025
Mains Switch	NN 0099
Voltage Selector	OA 0050
Mains Socket	OA 0059
Knob 10 mm	SN 1022
Cover for above	DD 0089
Knob 20 mm	SN 2011
Mains Transformer with Plug	TN 1013
Hinge for Moving Coil Instr.	UC 0074/75
Lamp for Moving Coil Instr.	VS 1273
Fuse 0,125 A	VF 0030
Fuse 0,25 A	VF 0031
Metal Link Chassis - Signal Ground	DK 0182

Furthermore 2610 includes the following Subassemblies the details of which will be found under the respective numbers.

Main Board	ZE 0263
Amplifier and Input Circuit Control Board	ZH 0180, ZL 0058
Filter and Detector Circuit Control Board	ZH 0181

Cabinet Parts

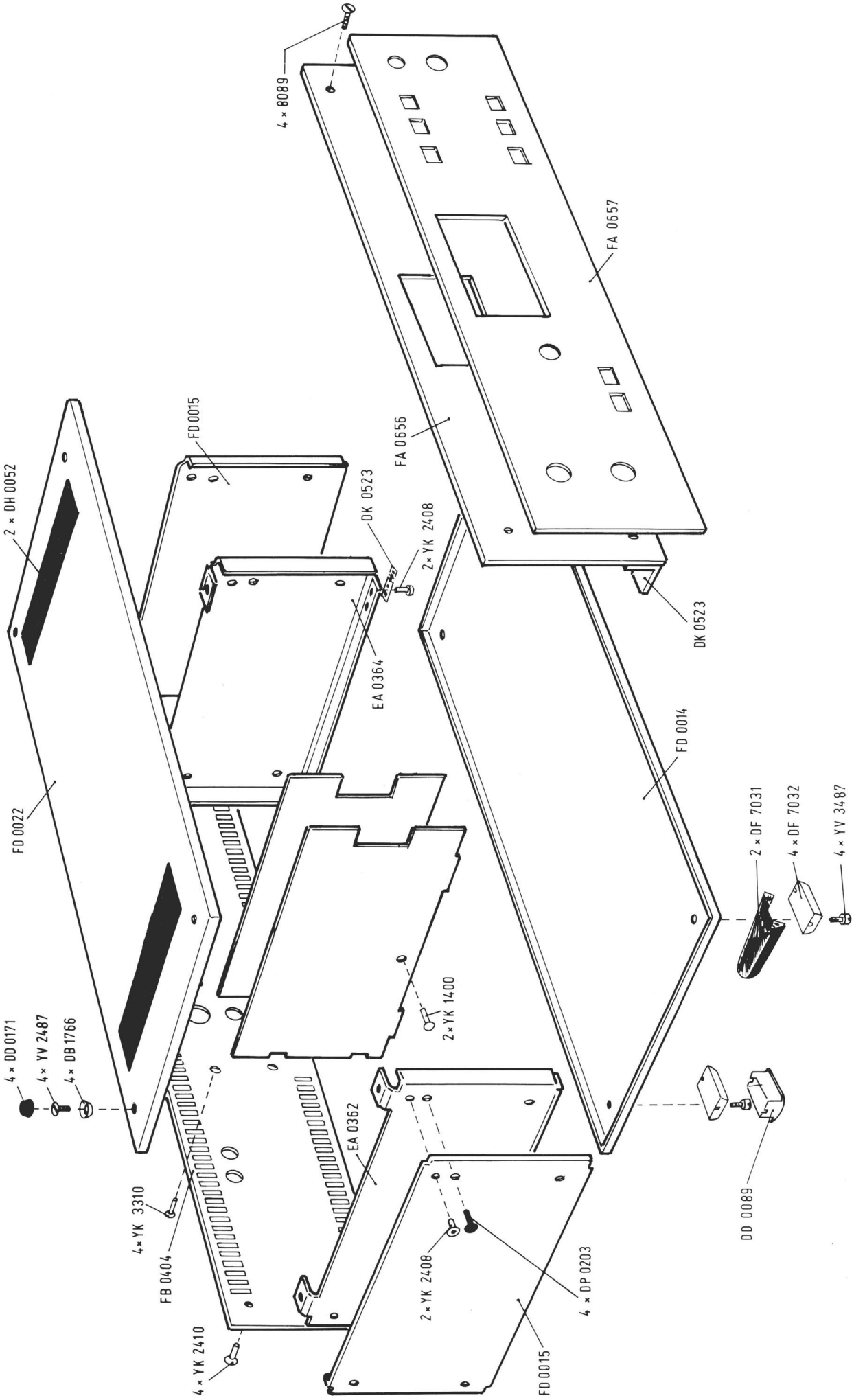

Detector and Recorder Circuit

ZE 0263

LAYOUT DIAGRAM

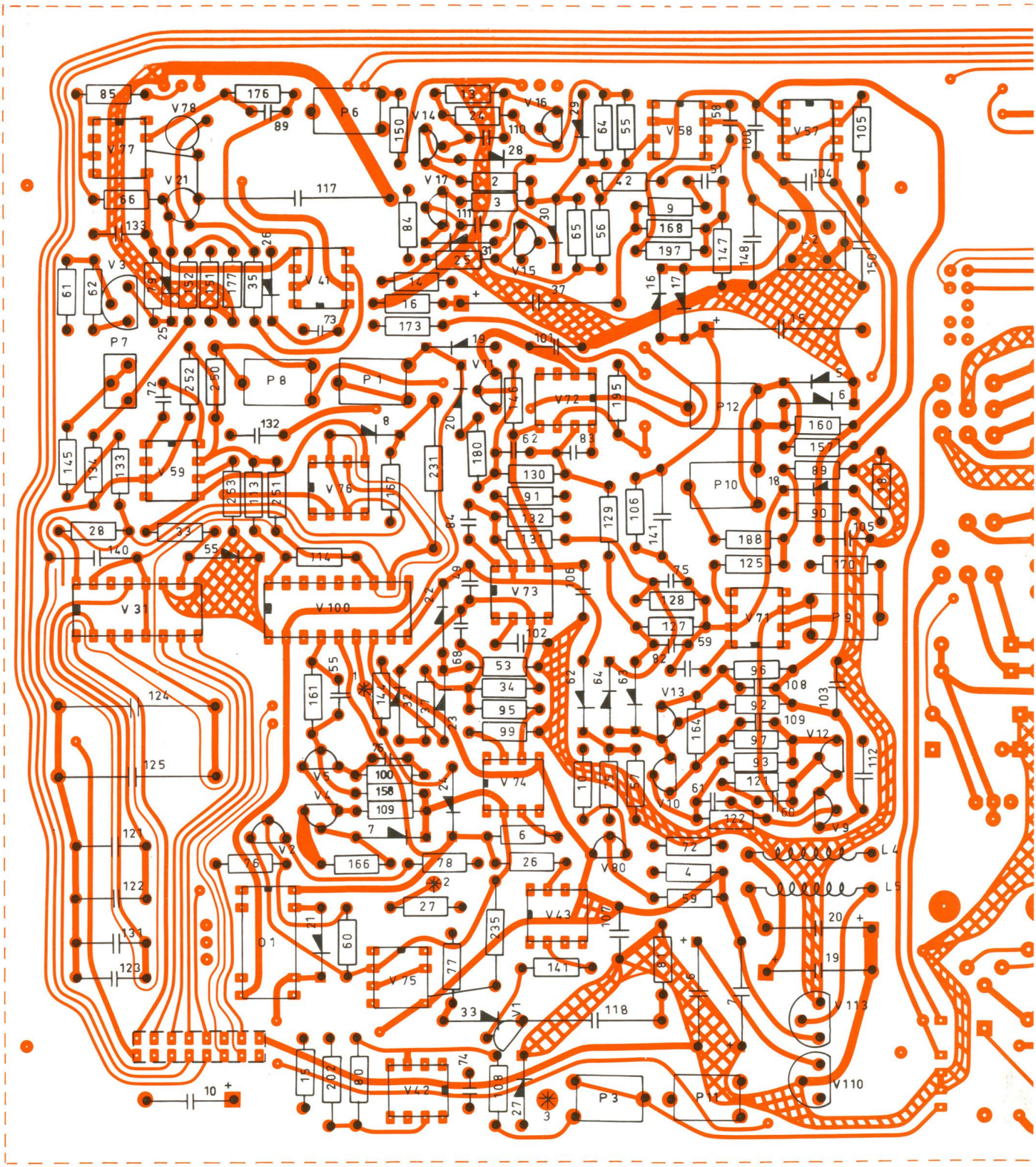

R C Q Q

Viewed from the printed circuit side

✳ Test Point

ZE 0263

ZE 0263 Detector and Recorder Circuit

PARTS LIST

C 6,7	Electrolytic			47 µF/ 25 V	CE 0491
C 10	-			47 µF/ 10 V	CE 0204
C 15	-			220 µF/ 6 V	CE 0208
C 19,20	-			10 µF/ 26 V	CE 0416
C 37	-			47 µF/ 40 V	CE 8965
C 49	Ceramic			4,7 pF/400 V	CK 0470
C 51	-			6,8 pF/400 V	CK 0680
C 55	-			10 pF/400 V	CK 1100
C 58	-			27 pF/400 V	CK 1271
C 59-62	-			10 pF/400 V	CK 1100
C 68	-			18 pF/400 V	CK 1180
C 72-74	-			27 pF/400 V	CK 1271
C 75	-			33 pF/400 V	CK 1330
C 76	-			27 pF/400 V	CK 1271
C 82-84	-			150 pF/400 V	CK 2151
C 89	-			2,2 nF/400 V	CK 3221
C 100-107	-			47 nF/ 30 V	CK 4470
C 108-111	-			47 nF/ 16 V	CK 4471
C 112	Polyester			47 nF/250 V	CS 0401
C 117	Polycarbonate			1 µF/100 V	CS 0336
C 118	-			220 nF/100 V	CS 0339
C 121,122	-			680 nF/ 63 V	CS 0348
C 123	-			68 nF/100 V	CS 0392
C 124,125	-			6,8 µF/ 63 V	CS 0397
C 131	-			100 nF/100 V	CS 0409
C 132,133	Ceramic			47 nF/ 30 V	CK 4470
C 140	Polystyrene			220 pF/125 V	CT 0501
C 141	-			68 pF/630 V	CT 1191
C 148	-			220 pF/125 V	CT 1118
C 150	-			270 pF/125 V	CT 1143
L 2	Coil			1,3 mH	LB 0925
L 4,5	-			30 µH	LJ 0008
O 1	Relay				OC 0062
P 1	Cermet	1/2 W		50 Ω	PG 0505
P 3	-	-		1 kΩ	PG 2117
P 6	-	-		2 kΩ	PG 2214
P 7	-	-		5 kΩ	PG 2524
P 8	-	-		20 kΩ	PG 3210
P 9,10	-	-		50 kΩ	PG 3516
P 11	-	-		200 kΩ	PG 4208
P 12	-	-		1 MΩ	PG 5112
Q 5-8	Ze.	1N4567		6,1-6,7 V/0,4 W	QV 0037
Q 16-32	Si.	1N4148		75 V/75 mA	QV 0216
Q 33	-	FDH800		150 V/200 mA	QV 0242
Q 55	Ze.	ZF9,1		8,5-9,6 V/0,25 W	QV 1109
Q 62	Si.	1N4148		75 V/75 mA	QV 0216
Q 63,64	-	HP5082-2302		30 V/100 mA	QV 5008
R 2,3	Carbon	1/4 W	5%	27 Ω	RB 1270
R 4	-	-	-	47 Ω	RB 1470
R 6	-	-	-	47 Ω	RB 1470
R 9	-	-	-	100 Ω	RB 2100
R 10	-	-	-	33 kΩ	RB 4330
R 13,14	-	-	-	120 Ω	RB 2120
R 15,16	-	-	-	100 kΩ	RB 5100
R 18	-	-	-	680 Ω	RB 2680
R 24-28	-	-	-	1,0 kΩ	RB 3100
R 33	-	-	-	1,2 kΩ	RB 3120
R 34	-	-	-	10 kΩ	RB 4100
R 35	-	-	-	2,2 kΩ	RB 3220
R 37	-	-	-	4,7 kΩ	RB 3470
R 42	-	-	-	4,7 kΩ	RB 3470
R 53	-	-	-	10 kΩ	RB 4100
R 55,56	-	-	-	33 kΩ	RB 4330
R 57	-	-	-	39 kΩ	RB 4390
R 59,60	-	-	-	47 kΩ	RB 4470
R 61	-	-	-	150 kΩ	RB 5150
R 62	Carbon	1/4 W	5%	47 kΩ	RB 4470
R 64-66	-	-	-	100 kΩ	RB 5100
R 72	-	-	-	1,0 MΩ	RB 6100
R 75	-	-	-	1,5 MΩ	RB 6150
R 76	-	-	-	150 kΩ	RB 5150
R 77	-	-	-	220 kΩ	RB 5220
R 78	-	-	-	330 kΩ	RB 5330
R 79	-	-	-	47 kΩ	RB 4470
R 80	Metal	-	1%	40,0 kΩ	RF 0279
R 81	-	-	-	3,30 Ω	RF 9233
R 84,85	-	-	-	49,9 Ω	RF 1499
R 89-91	-	-	-	100 Ω	RF 2100
R 92,93	-	-	-	110 Ω	RF 2110
R 95	-	-	-	499 Ω	RF 2499
R 96,97	-	-	-	845 Ω	RF 2845
R 99,100	-	-	-	1,00 kΩ	RF 3100
R 102	-	-	-	1,30 kΩ	RF 3130
R 105,106	-	-	-	1,78 kΩ	RF 3178
R 108	-	-	-	2,05 kΩ	RF 3205
R 109	-	-	-	2,80 kΩ	RF 3280
R 113,114	see V100				
R 121,122	Metal	1/4 W	1%	4,02 kΩ	RF 3402
R 125	-	-	-	4,87 kΩ	RF 3487
R 127-134	-	-	-	4,99 kΩ	RF 3499
R 141	-	-	-	6,19 kΩ	RF 3619
R 144	-	-	-	7,68 kΩ	RF 3768
R 145	-	-	-	7,87 kΩ	RF 3787
R 146	-	-	-	9,09 kΩ	RF 3909
R 147	-	-	-	9,31 kΩ	RF 3931
R 150	-	-	-	9,76 kΩ	RF 3976
R 151,152	-	-	-	10,0 kΩ	RF 4100
R 157	-	-	-	11,3 kΩ	RF 4113
R 158	-	-	-	12,7 kΩ	RF 4127
R 160	-	-	-	13,0 kΩ	RF 4130
R 161	-	-	-	14,3 kΩ	RF 4143
R 164	-	-	-	16,2 kΩ	RF 4162
R 166,167	-	-	-	17,4 kΩ	RF 4174
R 168	-	-	-	20,0 kΩ	RF 4200
R 170	-	-	-	26,7 kΩ	RF 4267
R 173	-	-	-	30,9 kΩ	RF 4309
R 176,177	-	-	-	49,9 kΩ	RF 4499
R 180	-	-	-	56,2 kΩ	RF 4562
R 188	-	-	-	127 kΩ	RF 5127
R 195	-	-	-	324 kΩ	RF 5324
R 197	-	-	-	383 kΩ	RF 5383
R 231	-	0,25 W	-	20,5 MΩ	RH 7205
R 235	Carbon	1/2 W	10%	300 MΩ	RH 0912
R 250	Adj.			200-400 kΩ	
R 251,252	see V100				
R 253	Metal	1/4 W	1%	3,57 kΩ	RF 3357
V 1-3	Si.		PNP	BC212B	VB 0049
V 4,5	-		PNP	BC179B	VB 0100
V 9-11	-		NPN	BF240	VB 0599
V 12,13	-		PNP	BF450	VB 0131
V 14,15	-		NPN	BF422	VB 0600
V 16,17	-		PNP	BF423	VB 0132
V 21	FET		N	U18899E	VB 1065
V 31	3 x 2 Chan. Mult./Dem.			CD4053	VD 2087
V 41,42	Op. Amp.			LM301	VE 0017
V 43	Comparator			LM311	VE 0054
V 57,58	Op. Amp.			LM318	VE 0083
V 59	Op. Amp.			LM201	VE 0084
V 71-73	Op. Amp.			AD4032B	VE 0160
V 74	Op. Amp.			HA5170-5	VE 0235
V 75-77	Op. Amp.			LF356	VE 0147
V 78	Si.		PNP	BC212B	VB 0049
V 80	-		NPN	BC182B	VB 0055
V 100	Thick film incl R113A, 114B, 251C, 252D				ZE 0256
V 110	Voltage Regulator			78L15	VE 0188
V 113	-	-		79L15	VE 0189

Power Supply Circuit

ZE 0263

LAYOUT DIAGRAM

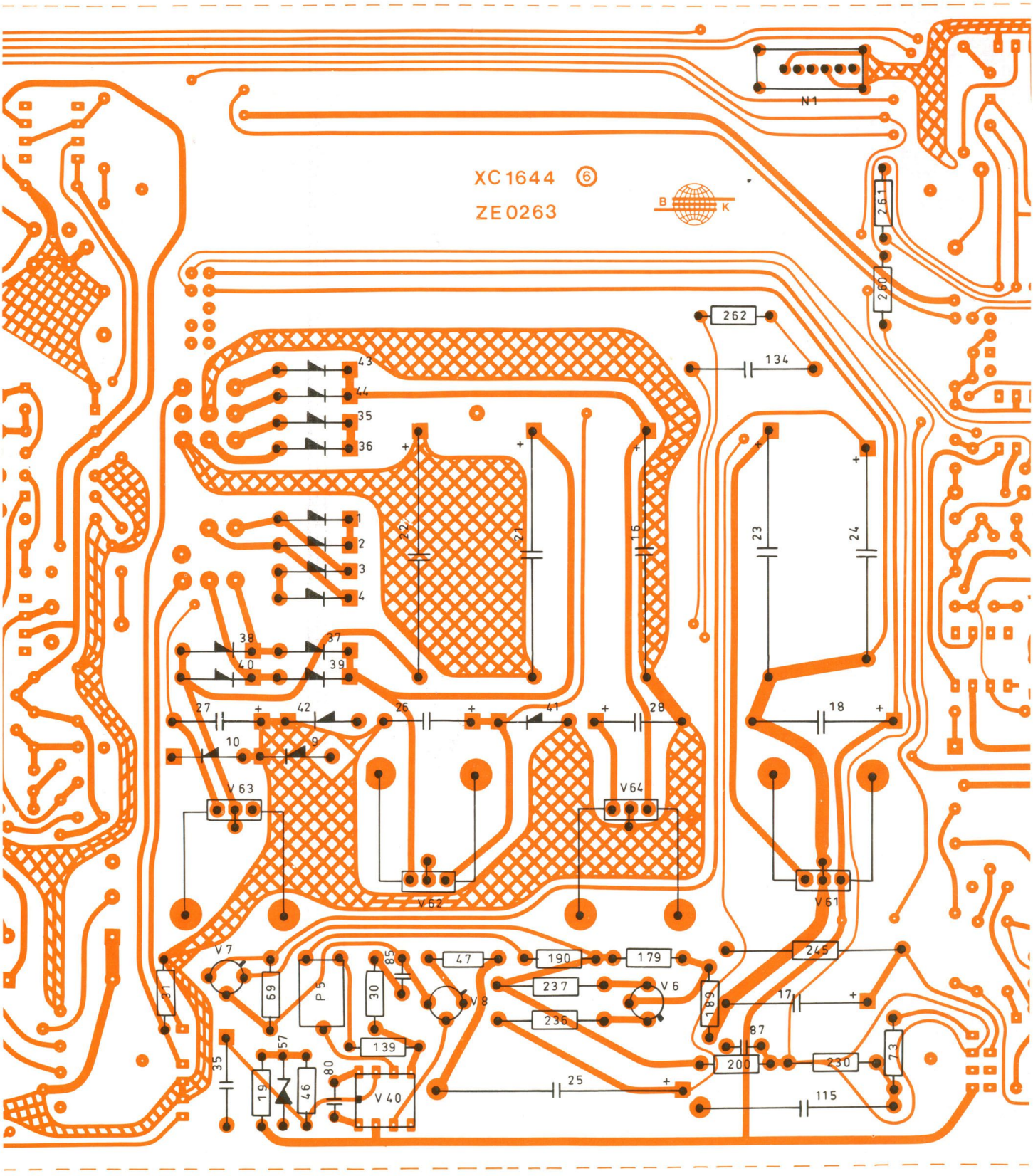

R C Q Q

Viewed from the printed circuit side

ZE 0263 Power Supply Circuit

PARTS LIST

C 16	Electrolytic			1000 µF/ 16 V	CE 0309
C 17,18	-			100 µF/ 16 V	CE 0310
C 21,22	-			1000 µF/ 40 V	CE 0469
C 23	-			1000 µF/ 25 V	CE 0419
C 24	-			4,7 µF/350 V	CE 0708
C 25	-			22 µF/250 V	CE 0805
C 26-28	-			22 µF/ 25 V	CE 2002
C 35	-			22 µF/ 25 V	CE 2002
C 80	Ceramic			68 pF/400 V	CK 1683
C 85	-			1 nF/400 V	CK 3101
C 87	-			1 nF/400 V	CK 3101
C 115	Polycarbonate			220 nF/400 V	CS 0117
C 134	-			220 nF/100 V	CS 0339
N 1	Input Overload Indicator Switch				NN 0105
P 5	Cermet	1/2 W		2 kΩ	PG 2214
Q 1-4	Si.	BYX10		1200 V/150 mA	QV 0025
Q 9,10	-	1N4148		75 V/75 mA	QV 0216
Q 35-44	-	1N4004		400 V/1 A	QV 0237
Q 57	Ze.	1N825		5,9-6,5 V/0,25 W	QV 1346
R 19	Carbon	1/4 W	5%	820 Ω	RB 2820
R 30,31	-	-	-	1,0 kΩ	RB 3100
R 46,47	-	-	-	5,6 kΩ	RB 3560
R 69	-	-	-	100 kΩ	RB 5100
R 73	-	-	-	1,0 MΩ	RB 6100
R 139	Metal	-	1%	5,23 kΩ	RF 3523
R 179	-	-	-	51,1 kΩ	RF 4511
R 189	-	-	-	154 kΩ	RF 5154
R 190	-	-	-	191 kΩ	RF 5191
R 200	-	-	-	649 kΩ	RF 5649
R 230	Carbon	-	5%	20 MΩ	RH 0002
R 236,237	Metal	-	1%	12,4 kΩ	RF 4124
R 245	Wire	4 W	10%	30 Ω	RX 0309
R 262	Metal	1/4 W	1%	49,9 Ω	RF 1499
V 6-8	Silicon	NPN		BF258	VB 0552
V 40	Op. Amp.			LM301	VE 0017
V 61	Voltage Regulator			MC7812	VE 0123
V 62	Fixed Voltage Regulator			MC7818	VE 0143
V 63	Fixed Voltage Regulator			MC7918	VE 0144
V 64	Fixed Voltage Regulator			MC 7806	VE 0145

Amplifier and Filter Circuit

ZE 0263

LAYOUT DIAGRAM

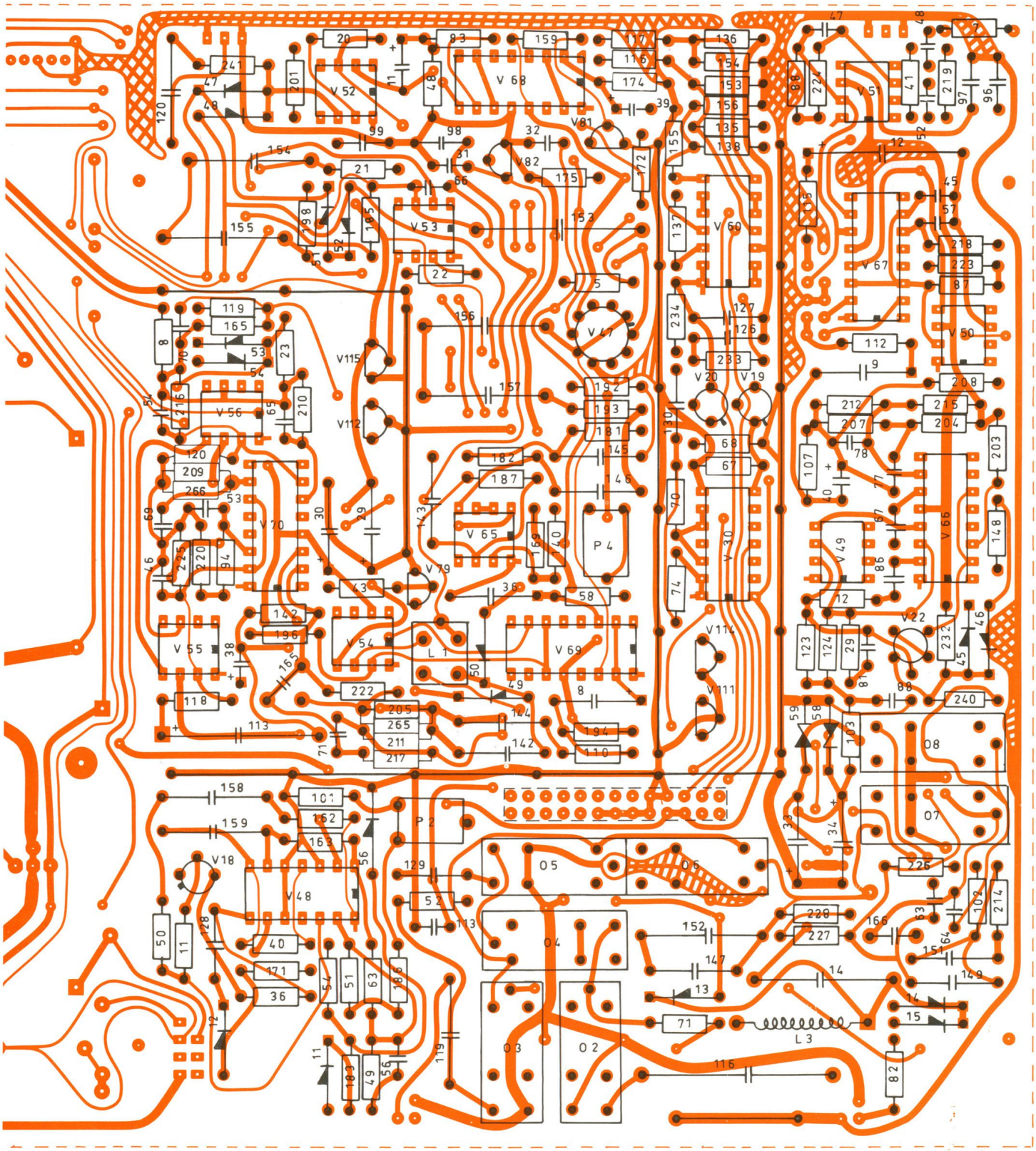

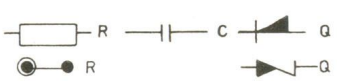

Viewed from the printed circuit side