BRÜEL & KJÆR
Nærum - Denmark

Service Instructions

2607

Measuring Amplifier

Consisting of

Trouble Shooting

If some sort of trouble occurs with this instrument then first check the D.C. working voltages from the Power Supply.

Then use the Checking Procedure with Block Diagram in order to localize a trouble to be in one certain circuit.

When a fault has been found and remedied the voltages and adjustments which are influenced by the remedy must be rechecked and the Checking Procedure can be used again to tell if all basic functions of the instrument are fulfilled.

The tolerance stated in the instructions can only be used as a guide for adjustment and control, but any deviations must not be corrected without being sure that the tolerances of the instruments used for making the adjustment are so small as to have no influence on the measurements.

Spare Parts

Please state type and serial number of apparatus when spare parts are ordered.

Instruments Necessary for Service and Repair

Multimeter (50 μA)
Frequency Generator (frequency range 2–200000 Hz f.inst. Type 1013 and 1017 (500 kHz for item 4.2)
Electronic Voltmeter (frequency range 2–200000 Hz, sensitivity 100 μV f.s.d.) f.inst. Type 2603 and 2604
Frequency Analyzer f.inst. Type 2107
Oscilloscope
Pulse Generator
High Impedance D.C. Voltmeter (10 mV f.s.d.)

Block Diagram of 2607

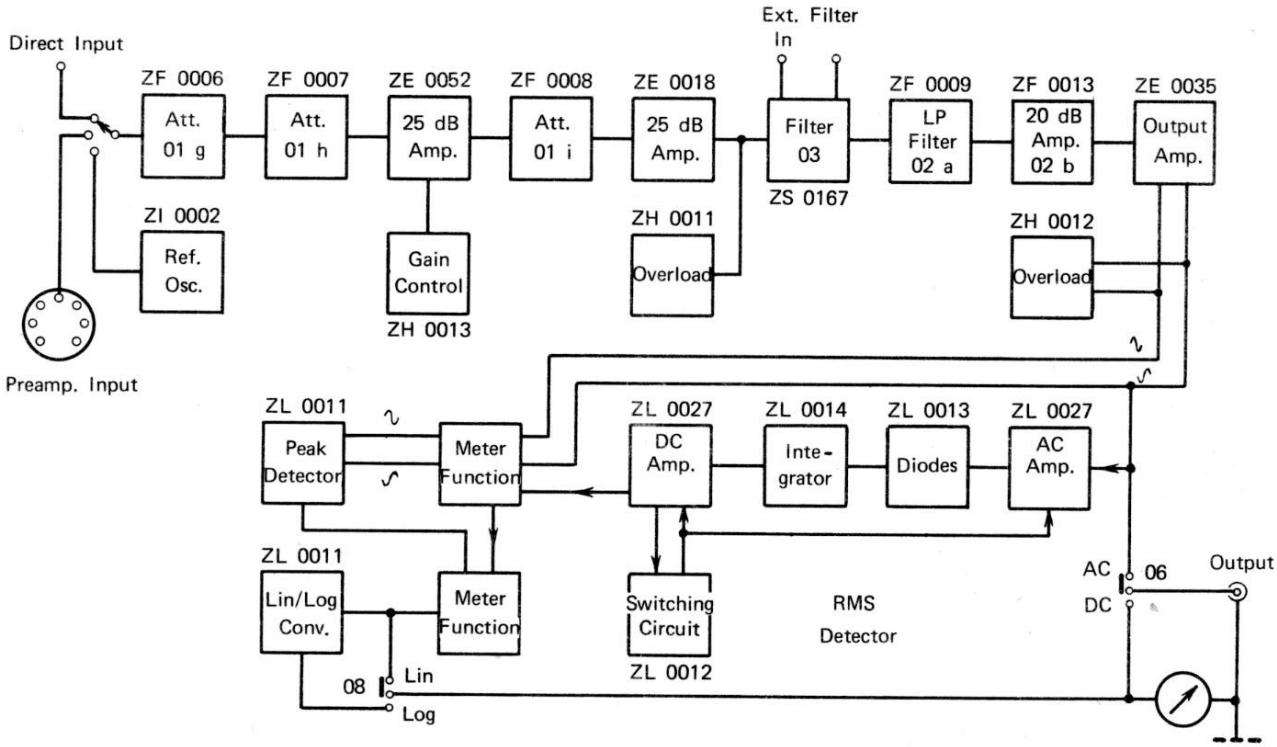

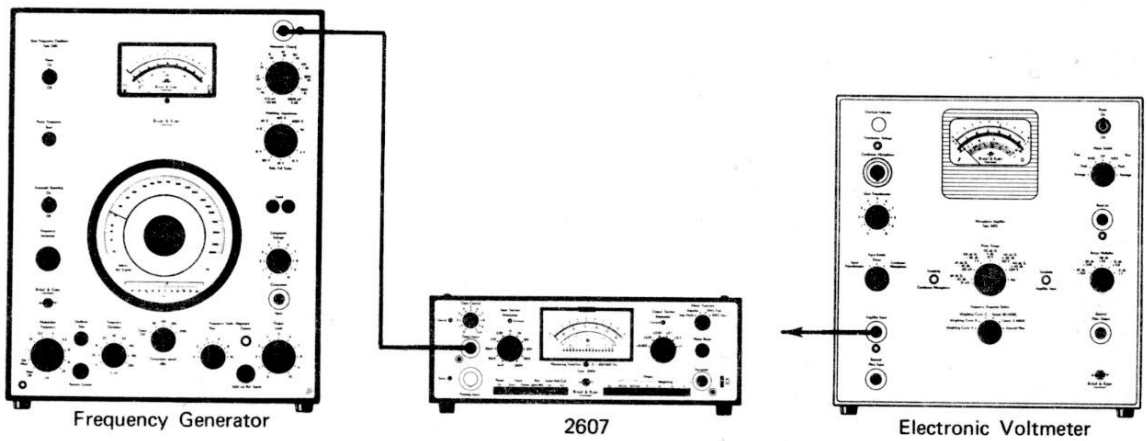

1.1 Sensitivity

a.	GAIN CONTROL: "Cal." POWER: "On" INPUT: "Direct" INPUT ATTENUATOR: "0.1 V" OUTPUT ATTENUATOR: "x 1" FILTERS: "All released" METER FUNCTION: "RMS" AVERAGING TIME: "Fast" OUTPUT: "AC"	Input signal to "Direct Input" of 2607: 0.1 V–1000 Hz. Adjust "Sens." for 0.1 V deflection (adjustment range for "Sens." adj. approx. + 4, –10 dB). "Output": 10 V RMS ± 0.5 dB.
b.	OUTPUT to "DC"	"Output": approx. 4.5 V. (The Output impedance is 820Ω). If out of tolerance adjust according to item 3.1.
c.	FILTERS to "A–B–C–D–22.4 Hz–22.4 kHz"	Deflection on 2607 for all positions: 0.1 V ± 0.2 dB
d.	FILTERS to "Ext."	Output voltage on "Ext. Filter Input": 1 V ± 0.5 dB.

continued

1.2 Frequency Response

INPUT: "Direct" FILTERS: "All released" METER FUNCTION: "RMS Fast"	Input signal: 1000 Hz adjusted to give an 18 dB deflection on 2607. Vary the frequency from 2 Hz to 200 kHz: Deflection 18 dB ± 0.5 dB. From 10 Hz to 50 kHz the tolerance is ± 0.2 dB. (+ tolerance of the BFO).

1.3 Meter Function

a. INPUT: "Direct" FILTERS: "All released" METER FUNCTION: "RMS-Lin." AVERAGING TIME: "Fast"	Input signal: 1000 Hz adjusted to give a 15 dB deflection on 2607.
b. METER FUNCTION to "Impulse"	Deflection 15 dB ± 0.1 dB. Disconnect the input signal and check that the deflection drops 8.6 dB in 3 sec. ± 0.5 sec.
c. METER FUNCTION to "Imp. Hold"	Connect the previous input signal and shortly depress "Reset". Deflection 15 dB ± 0.1 dB. Disconnect the input signal and check that the deflection drops max. 3 dB in one minute.
d. METER FUNCTION to "+ Peak" "–Peak" "Max. Peak"	Deflection in all three positions: 18 dB ± 0.1 dB.
e. METER FUNCTION to "RMS"	Adjust the input signal to full scale deflection (10).
f. METER FUNCTION to "RMS-Log"	Deflection: 8 on 10 V scale ± 0.5 dB. Increasing the input voltage + 10 dB should cause full scale deflection. Attenuation of –10, –20, –30 and –40 dB should give deflections of 6, 4, 2 and 0 (± 1 dB).

1.4 Averaging Time

a. INPUT: "Direct" FILTERS: "All released" METER FUNCTION: "RMS-Lin" AVERAGING TIME: "Fast"	Input signal: 1000 Hz adjusted to give full scale deflection on 2607.
b. AVERAGING TIME: "Fast to 300 sec."	Same deflection through all positions.
c. AVERAGING TIME: "300 sec."	Disconnect the input signal and turn the "Averaging Time" selector slowly down through the positions. It should be noticed that the deflection drops faster and faster in each position.
d. AVERAGING TIME to "Fast"	Adjust the input signal to an 18 dB deflection. When connecting and disconnecting the input signal the overshoot should be 0.6 dB ± 0.5 dB.
e. AVERAGING TIME to "Slow"	Overshoot: 0.6 dB $^{+1}_{-0.5}$ dB
f. AVERAGING TIME to "0.1 sec."	Overshoot: 0–0.2 dB.

1.4 Overload Indicators

a. GAIN CONTROL: "Cal." INPUT: "Direct" INPUT ATTENUATOR: "0.1 V" OUTPUT ATTENUATOR: "x 1" FILTERS: "All released"	Input to "Direct Input": 1 kHz–0.1 V RMS corresponding full scale deflection on 2607. Raise the input signal to 11 dB above 0.1 V: No overload indication. Raise the input signal to 13 dB above 0.1 V: Input overload indication.
b. FILTERS to "Ext."	Input to "Ext. Filter Out": 1 kHz–1 V RMS corresponding approx. full scale deflection of 2607. Raise the input signal to 11 dB above 1 V: No overload indication. Raise the input signal to 13 dB above 1 V: Output overload indication.

1.5 Noise

GAIN CONTROL: "Cal."
INPUT: "Direct"
INPUT ATTENUATOR: "3 mV"
OUTPUT ATTENUATOR: "x 0.003"
FILTERS: "All released"

Max. noise deflection for correctly adjusted sensitivity: 14 μV.

Max. noise with shortconnected input: 7 μV.

1.6 Reference

a. GAIN CONTROL: "Cal."
INPUT: "Direct"
INPUT ATTENUATOR: "0.1 V"
OUTPUT ATTENUATOR: "x 1"
FILTERS: "All released"
REF: "50 mV RMS"

Check the adjustment range of "Sens." and "Gain Control" which should be 10 dB for each of them.

Leave "Gain Control" in "Cal." and adjust "Sens." for a deflection to the ref. mark on the 2607 meter scale.

b. REF: "Released"

Input signal to "Direct Input": 1 kHz, exactly 100 mV.

Deflection on 2607: 100 mV ± 1%.

If necessary see item 5.7.

1.7 Sensitivity with Microphone

a. GAIN CONTROL: "Cal."
INPUT: "Preamp."
INPUT ATTENUATOR: "0.1 V"
OUTPUT ATTENUATOR: "x 1"
FILTERS: "All released"
REF: "50 mV RMS"

Adjust "Preamp. Sens." to the correct sensitivity of the microphone and connect a Microphone Preamplifier to "Preamp. Input".

b. REF: "Released"
INPUT ATTENUATOR: "3 V"

Check the sensitivity with a Pistonphone Type 4220 or a similar wellknown sound source. The meter deflection on 2607 should be equal to the Sound Pressure Level produced by the Pistonphone. (Remember corrections for the actual static pressure).

Tolerance: 0.2 dB. (Pol. Voltage 200 V ± 1 V).

The following table tells what to care about when replacing printed circuit boards with components:

By replacement of:

ZE 0052	25 dB Amplifier	Check items 5.1 to 5.8
ZE 0018	25 dB Amplifier	- - - - -
ZE 0035	50 dB Amplifier	Check items 4.1 to 4.8 and 3.1
ZF 0005	Attenuator	No adjustment necessary
ZF 0006	Attenuator	Check item 5.3
ZF 0007	Attenuator	- - -
ZF 0008	Attenuator	- - -
ZF 0009	LP Filter	Check items 4.2 and 4.3
ZF 0013	20 dB Amplifier	Check items 4.3 and 3.1
ZG 0005	+ 12.6 V Regulator	Adjust P 380 for + 12.6 V on V 383_E
ZG 0007	DC/AC Converter	No adjustment necessary
ZG 0008	+ 140 V and Pol. Volt. Reg.	Adjust P 420 for Pol. Volt. 200 V ± 1 V and check + 140 V
ZG 0038	± 20 V Regulator	Adjust P 440 for + 20 V on V 447_E and check −20 V on V 446_E
ZH 0011	Overload Indicator	Check item 5.4
ZH 0012	Overload Indicator	Check item 4.4
ZH 0013	Gain Circuit	Check item 1.6
ZI 0002	Ref. Oscillator	Check item 5.7
ZL 0011	Peak-Lin/Log	Check items 3.9 to 3.11
ZL 0012	Switching Circuit	Check items 3.4 to 3.6
ZL 0013	Integrator	Check item 3.3
ZL 0014	Diodes	Are adjusted from the factory, evt. check item 3.8
ZL 0027	Amplifier	Check items 3.1, 3.2 and 3.5
ZS 0167	Filter	Adjust according to item 6.1 and check items 6.2 and 6.3

Power Supply

2607.2

valid from serial no. 308927

The instrument can be powered either from a Power Line which has 100, 115, 220 or 240 V AC 50–400 Hz or from a DC Supply of 12 V.

Thus the mains transformer T1 has two primary windings, one meant for the Power Line operation the other one meant for the 12 V DC Supply which is chopped in a DC/AC Converter ZG 0007.

Connected to the secondary of T1 there are different rectifier circuits giving different D.C. Voltages which are applied to the Voltage Regulators ZG 0005, 0008 and 0038.

These Voltage Regulators are almost identical and their function can be seen from the simplified diagram below.

Simplified Diagram of a Voltage Regulator.

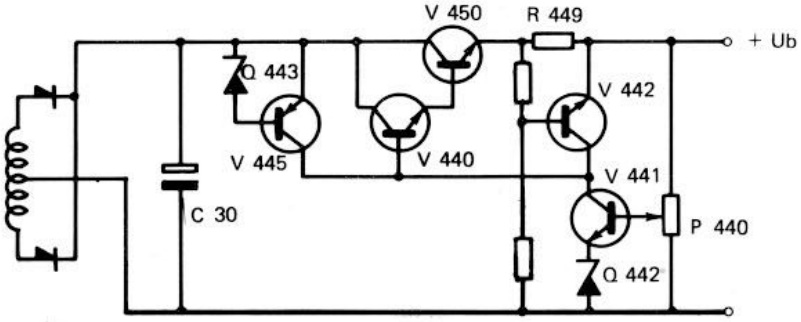

The function of this Regulator type is that a fixed voltage across Q 442 is compared with the voltage on the base of V 441. A certain difference between these two voltages will give a certain current through V 441. V 445 can be regarded as a collector impedance for V 442 and thus we will have a voltage on the base of V 440 and V 450 of approx. the same value as the output voltage. Now if the output voltage drops, the voltage difference between base and emitter of V 441 will be smaller, the current through V 441 smaller and the base voltage of V 440 and V 450 and the output voltage higher and thus it will regulate until a stabilized condition all the time.

Actually V 445 is not an ordinary collector impedance for V 441, but a constant current source, which means that if we have a constant current through V 441 its collector voltage will be constant as well as independent of hum or unstability across C 30.

Furthermore the Regulator is overload protected by means of V 442 and R 449. V 442 is coupled as a variable impedance from base to emitter of the emitterfollower V 440, 450 and regulated by the bias achieved from the current through R 449. When the impedance of V 442 grows smaller V 440, 450 will be off-biased so that the output voltage and current drops.

The output voltages from the different Regulators can be seen on the circuit diagram and adjusted on the respective circuit boards. If large adjustments are found necessary the circuits should be examined for faults before any adjustment.

The DC/AC Converter ZG 0007 oscillates with a frequency of approx. 60 Hz and the real oscillatortransformer is T 2.

Adjustment of:

+ 20 V	on V 450_E	at P 440
+12.6 V	on V 383_E	at P 380
+ 200 V	on Pol. Voltage	at P 420

Meter Circuit

valid from serial no. 308927

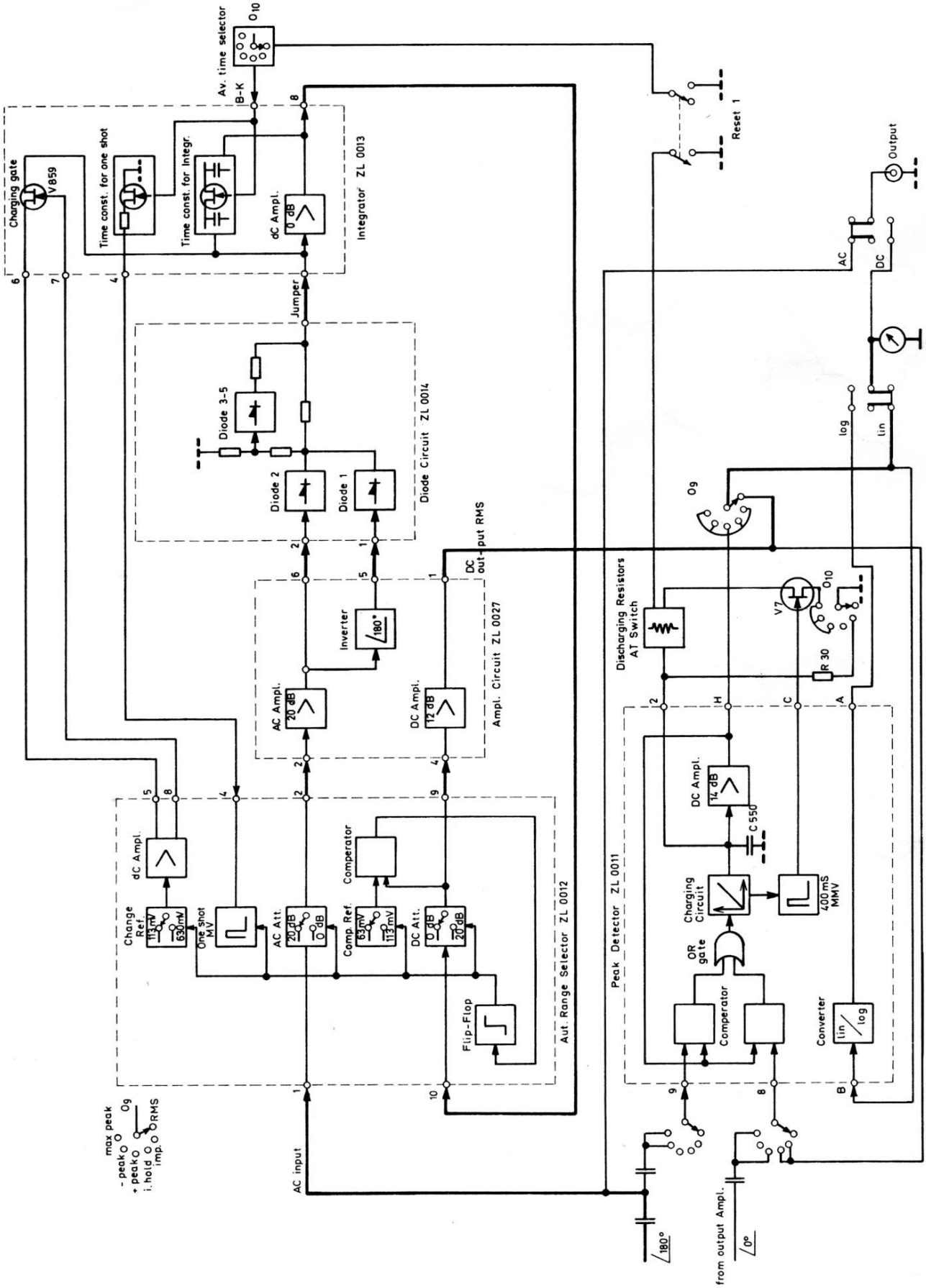

Meter Circuit

valid from serial no. 308927

Simplified Diagram of the Meter Functions

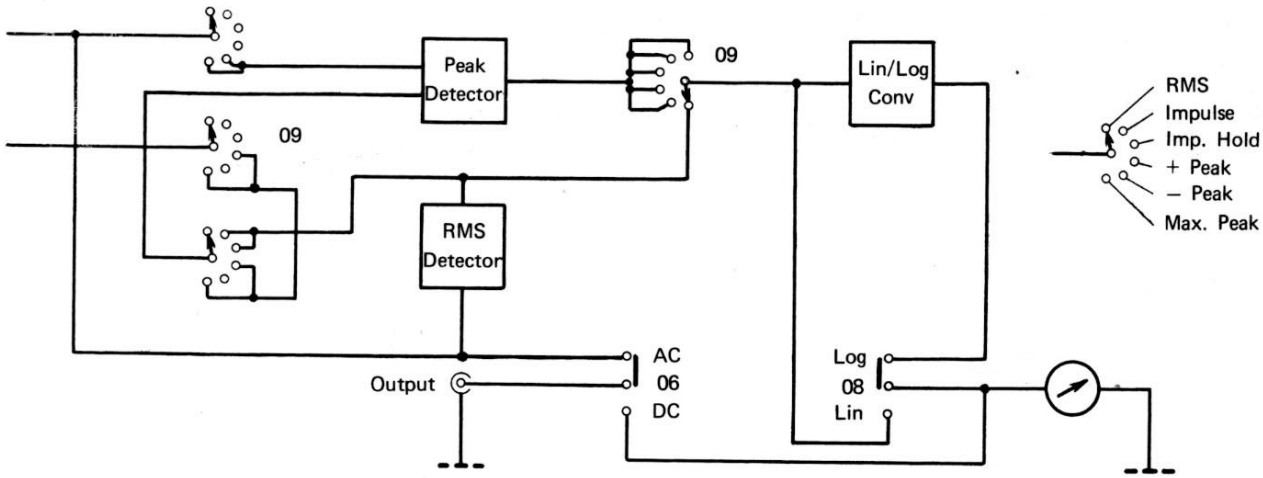

The Meter Circuit of 2607 consists basically of a Peak Detector, an RMS Detector and a Lin/Log Converter. The diagram above shows how the "Meter Function" switch directs the signal to the circuits according to the six different Meter modes. In RMS mode the 10 V AC is applied to the RMS Detector, to the Lin/Log Converter and out to the meter. In Impulse and Imp. Hold modes the output of the RMS Detector is applied to the + Peak Detector in order to have the maximum RMS value indicated. In the three Peak modes the + Peak, the –Peak or the Max. Peak can be chosen, and here the RMS Detector is not used at all. In the input stage of the Peak Detector there are attenuators to give the same voltage level on both inputs, but with a phase difference of 180°. Thus all three different Peak modes will give same deflection on a pure sine wave.

The "Recorder Output" can be AC or DC dependent of the setting of 06 and the DC output will follow the meter function to an ordinary linear mode or a logarithmic mode chosen by 08.

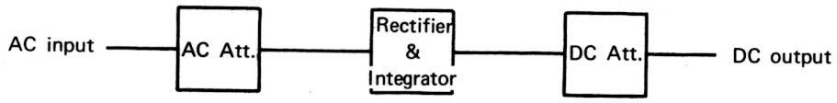

The wide dynamic range of the RMS circuit is achieved by means of an AC attenuator on the input of the signal rectifier and a DC attenuator on the output of the rectifier.

On low input levels there is a low attenuation before the signal rectifier and a high attenuation of the DC output voltage.

On high input levels the AC attenuation is 20 dB more and the DC attenuation 20 dB less than on low input levels.

At the cross-over level an electronic switch circuit sets the attenuators to the correct positions.

continued

Principle of the RMS Detector

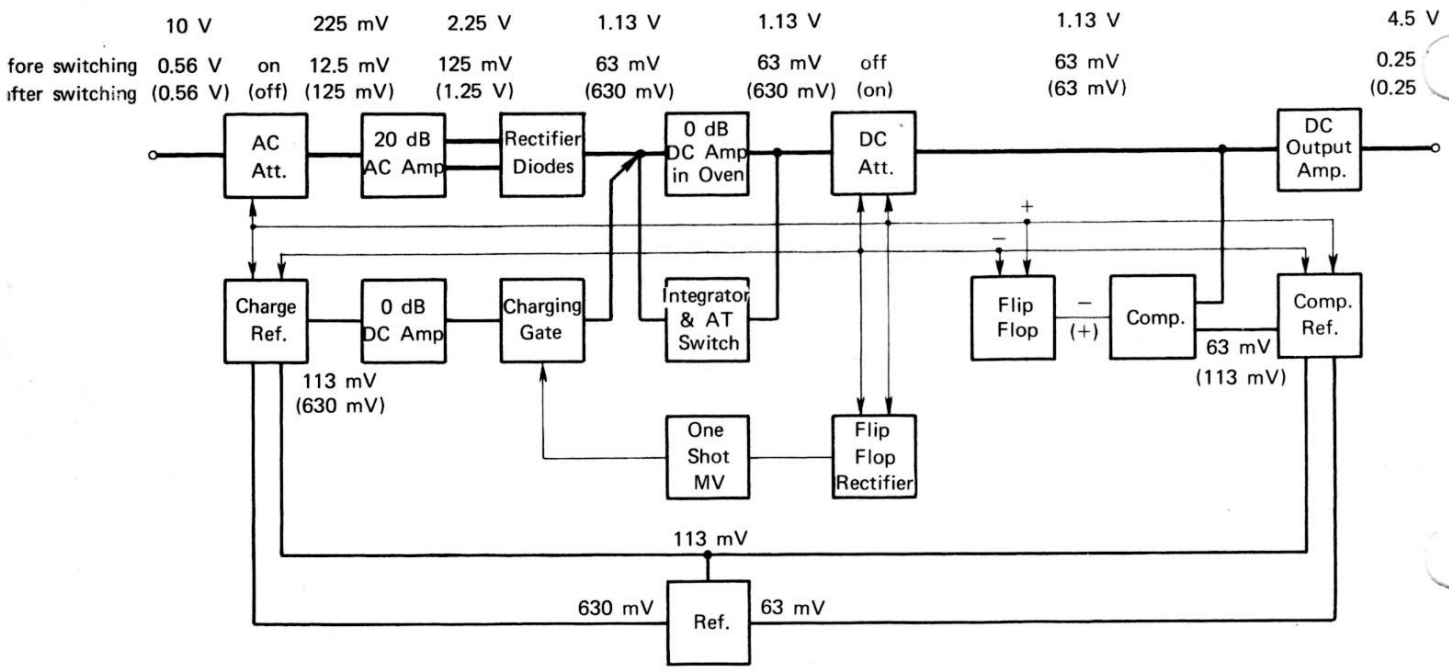

With 10 V AC input to the RMS circuit the AC attenuator has chosen the low output (225 mV) which is applied through a 20 dB symmetric amplifier to the signal rectifier. To the rectifier output (1130 mV) is connected an integrator and a 0 dB DC amplifier in an oven the output of which is led to the DC attenuator. This attenuator is in the high output position and the DC output amplifier will have 1130 mV on the input and 4.5 V on the output. In this position the comparator reference is 63 mV and the comparator output is negative. A negative input to the flip-flop gives the output situations indicated, and these situations set the attenuators, the comp. ref. and the charge ref.

When the 10 V AC input signal is decreased the output voltage from the DC attenuator will decrease as well and when this voltage is approx. 63 mV the comparator will cause a change of the flip-flop situation and the attenuators will make a level change as shown on the block diagram above. At the same time the comp. ref. will change to 113 mV. Thus the level change when decreasing will happen at 63 mV, but when increasing it will happen at 113 mV. When a level change is made the change of the capacitors in the integrator must change value by a factor of 10, this must be done very fast to avoid unstability of the deflection. The charge ref. is controlled from the flip-flop and when the level is changed from f.inst. 63 mV to 630 mV on the integrator the charge ref. will change from 113 mV to 630 mV. Each level change gives a signal to a one shot multivibrator and this opens the charging gate. Thus 630 mV will be applied to the capacitors in the integrator while the gate is open. The pulse duration of the one shot multivibrator is controlled by the "Average Time" switch and so the charging time always corresponds to the value of the capacitors in the integrator.

Simplified Diagram of One Diode

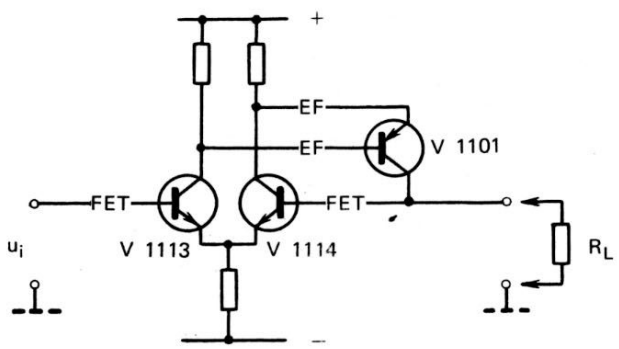

The principle of one diode is shown on the sketch above. When the input base is more positive than the feedback base the output transistor will apply a positive voltage to R_L. The voltage across R_L will be exactly the same as the input voltage because of a 100% feedback. A negative input will cause an open circuit output transistor and the voltage across R_L will be 0 V.

In the practical circuit there are two F.E.T.'s and two emitter followers connected as shown.

The advantage of this circuit compared to an ordinary diode is that this does not load the signal source at all, and any positive input voltage from a few mV to 10 V will generate an output signal of exactly the same value, i.e. a very linear diode.

Simplified Diagram of Integrator ZL 0013

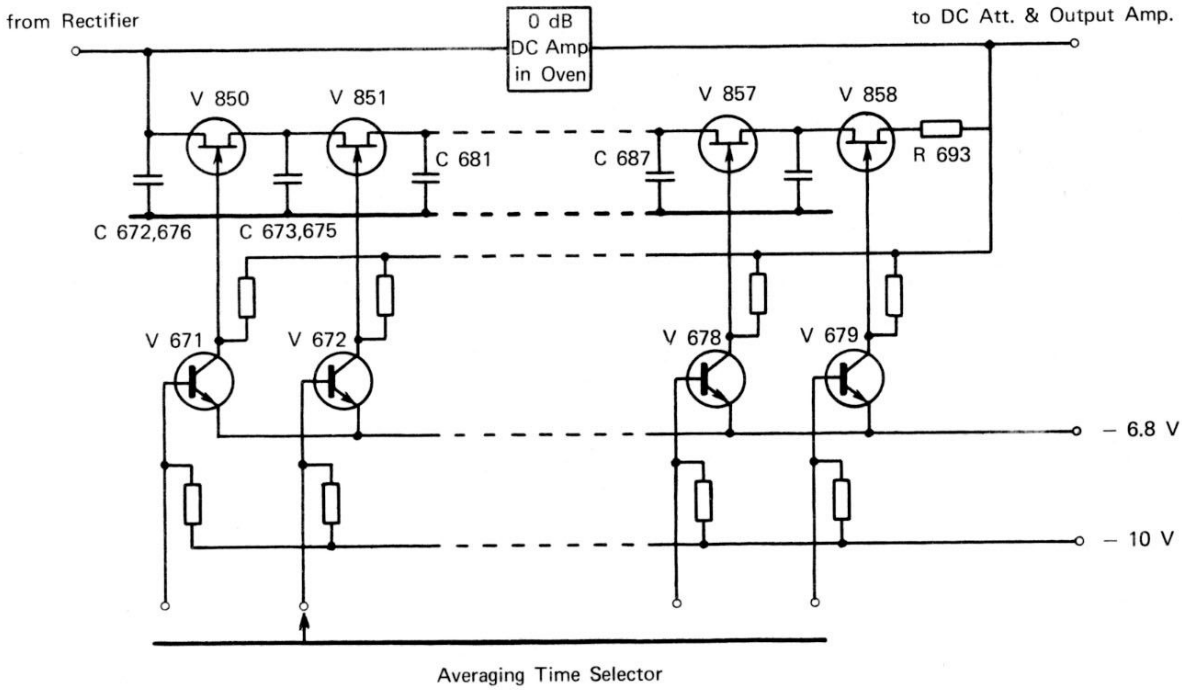

From the signal rectifier a positive DC voltage with ripple is applied to the integrator, which is formed by a number of capacitors in parallel. A smaller and larger number of capacitors will be connected dependent of the position of the "Average Time" selector.

As shown on the simplified diagram above F.E.T.'s are used as gates to connect the capacitors across the output from the rectifier. All F.E.T.'s except one will be shortcircuited at any time and if V 851 is the one which is opencircuit C 672, 676, 673 and 675 will be acting as integrating capacitors. At the same time all the capacitors C 681–690 will have the same voltage due to R 693 and when selecting another average time there will not be any change in deflection at all.

The actual gate function is as follows: All drains and sources of the F.E.T.'s will always be 0 V or positive. When the bases of the switch drivers are not connected to ground the F.E.T. gates will have the same voltage as the drains and sources because the switch drivers are open circuit. But when a base of a switch driver is connected to ground the base is positive related to the –6.8 V on the emitter and the transistor is shortcircuited. Thus the gate of the corresponding F.E.T. will be –6.8 V and the F.E.T. will be open circuited.

The F.E.T.'s V 841–849 shown on the original diagram do not influence the integrator but connect different resistor values giving the time constant for the one shot multivibrator which opens the charging gate.

Simplified Diagram of Lin/Log Converter

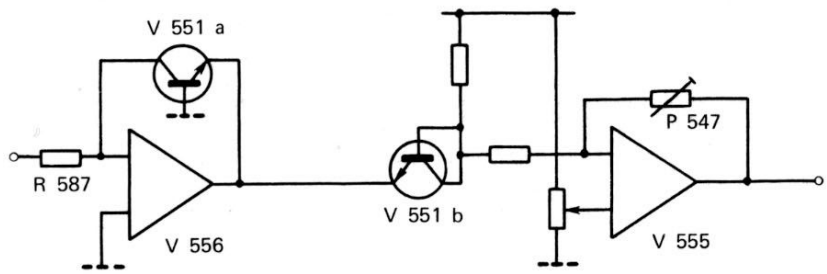

The Lin/Log converter utilizes the fact that the relationship between collector current and emitter-base voltage of a transistor is logarithmic for currents in the range of 1 nA to 1 mA.

The operational amplifier V 556 gives a logarithmic output voltage for a linear input current because V 551 a is used as a logarithmic feedback element. A feedback applied to the emitter causes the collector current to be equal to the input current through R 587. The linear feedback current through V 551 a forces the base emitter voltage and thus the output voltage of V 556 to have a logarithmic function.

V 551 b is a temperature and level compensation for V 551 a both being in the same housing.

V 555 inverts the output signal to have the same polarity as the input and amplifies the signal to the desired scale factor, which is 90 mV per dB.

continued

Simplified Diagram of Peak Detector

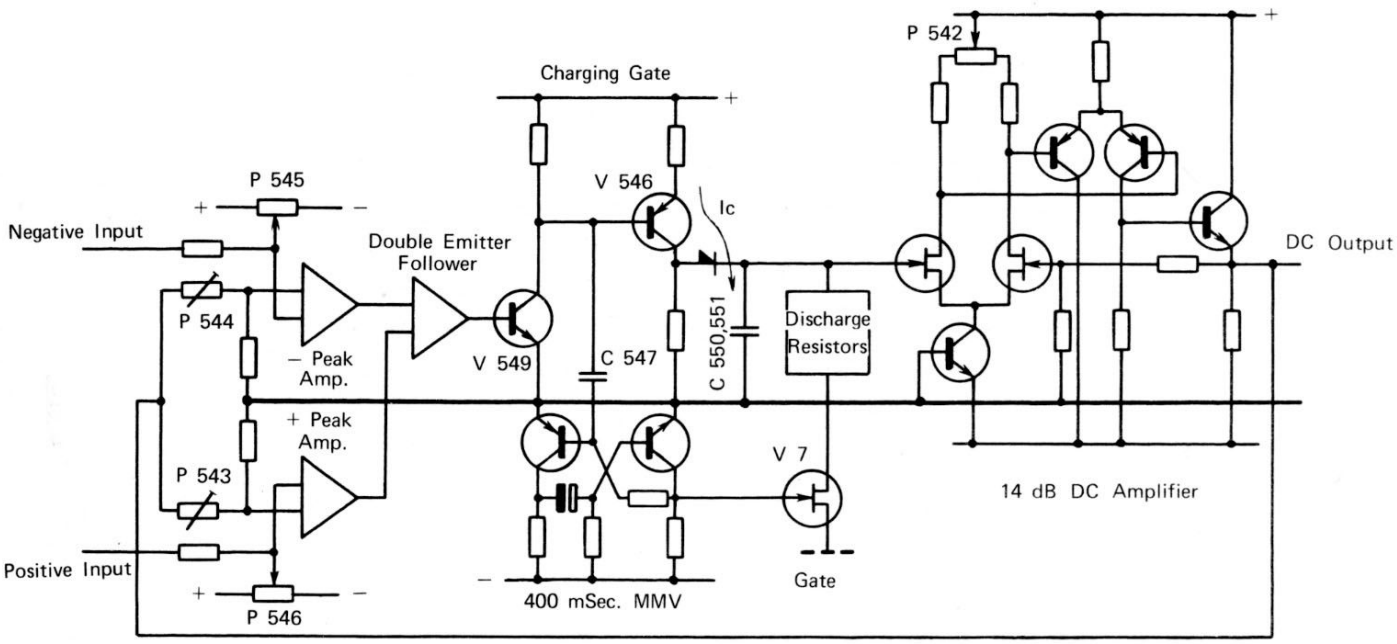

The Peak Detector has two comparators in the input stage, one working on positive signals, the other one on negative signals. (Polarity related to the input of 2607). There is a feedback from the output amplifier giving the reference to the input comparators and when the input signal is higher than the feedback the comparator will give a logic "1" out through the double emitter follower which is an OR-function. A logical "1" will open V 549 and 546 and C 550 is charged very fast with a linear function. The output of the 14 dB amplifier will follow the capacitor voltage and increase the reference (feed-back) on the input comparator. When the reference reaches the input value the comparators will go to logical "0" and the charging of C 550 will stop. C 550 will then be discharged according to the chosen time constant and when the input level is higher than the reference feed back a charging of C 550 will be started again.

C 550 can be charged from 0 V to full value in 20 µSec., but the moving coil instrument uses 400 mSec. to reach full scale deflection. Thus a 20 uSec. impulse on the input when a fast "Average Time" is chosen would only give a very little deflection on the meter. In order to obtain a correct deflection even on very short pulses there is a delay of 400 mSec. before a discharge of C 550 is started. Each time a signal is given to charge C 550 a monostabil multivibrator is activated through C 547. The multivibrator opens V 7 and thus a discharge of C 550 through the Discharge Resistors does not start until 400 mSec. later. In this way the indicating meter will have time enough to indicate the input impulse correctly.

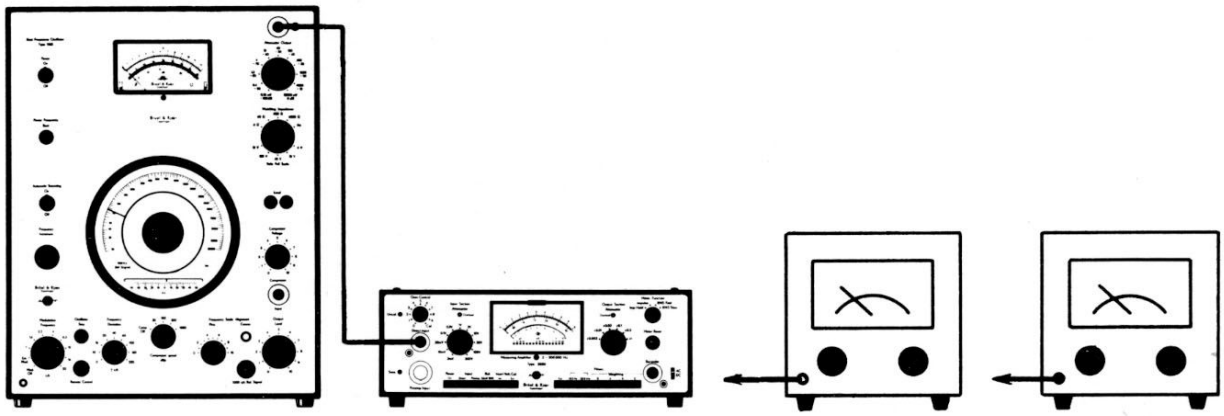

3.1 RMS Sensitivity

a. INPUT: "Direct"
INPUT ATTENUATOR: "0.1 V"
OUTPUT ATTENUATOR: "x 1"
FILTERS: "All released"
METER FUNCTION: "RMS-Lin."
AVERAGING TIME: "Fast"

Input signal to 2607: 1000 Hz adjusted for exactly 10 V on AC Output.

Check the DC Output: + 4.5 V DC ± 50 mV.

If necessary adjust P 1202 (DC Gain on ZL 0027).

Check that the meter deflection is full scale.

If necessary adjust P 3 (RMS Sens. on XC 0669).

b. METER FUNCTION to "Impulse"

Check that the meter deflection is full scale. (At + 4.5 V DC on Recorder).

If necessary adjust P 2 (Imp. Sens. on XC 0669).

3.2 Liniarity

INPUT: "Direct"
INPUT ATTENUATOR: "0.1 V"
OUTPUT ATTENUATOR: "x 1"
FILTERS: "All released"
METER FUNCTION: "RMS-Lin."
AVERAGING TIME: "Fast"

Input signal: 1000 Hz adjusted to give exactly + 4.5 V DC Output.

Check the DC Output according to the following scheeme.

INPUT ATTENUATOR position	DC Output	Corresponding Dynamic
30 mV	14.2 V ± 0.3 dB	+10 dB
0.1 V	4.5 V	0 dB
0.3 V	1.42 V ± 0.3 dB	−10 dB
1 V	450 mV ± 0.3 dB	−20 dB
3 V	142 mV ± 0.3 dB	−30 dB
10 V	45 mV ± 0.3 dB	−40 dB
30 V	14.2 mV ± 0.5 dB	−50 dB
100 V	Max. 8 mV	−60 dB

If the DC Output is linear on + 10 dB, −10 dB and −20 dB but unlinear from −30 dB to −60 dB adjust P 1201 (DC Balance on ZL 0027).

If the DC output is nonlinear on + 10 dB, −10 dB and −20 dB the trouble will be unliniarity in the Integrator or misalignment of the automatic DC attenuator.

continued

3.3 Check of Integrator ZL 0013

a. INPUT: "Direct"
INPUT ATTENUATOR: "0.1 V"
OUTPUT ATTENUATOR: "x 1"
FILTERS: "All released"
METER FUNCTION: "RMS-Lin."
AVERAGING TIME: "Fast"

Input signal: 1000 Hz approx. 100 mV to give full scale deflection on 2607.

Connect a High Impedance DC Voltmeter to the output of the 0 dB DC amplifier on ZL 0013 (the wire around the oven) and fineadjust the input voltage to give exactly 1 V DC on the Voltmeter.

b. INPUT ATTENUATOR to "1 V"

The DC Voltmeter should indicate exactly 100 mV.

If necessary adjust P 671, 672 (Integrator Balance, fine and coarse).

c. INPUT ATTENUATOR to "0.1 V"

Adjust the input voltage to give exactly 1 V on the DC Voltmeter and repeat the adjustment until complete liniarity over the 20 dB working range.

ATT.: The procedure must be followed very carefully, because the automatic attenuation will take place at 63 mV and this would move the working point up to the upper part of the parabolla.

3.4 Automatic Attenuator

a. INPUT: "Direct"
INPUT ATTENUATOR: "0.1 V"
OUTPUT ATTENUATOR: "x 1"
FILTERS: "All released"
METER FUNCTION: "RMS-Lin."
AVERAGING TIME: "Fast"

Input signal: 1000 Hz adjusted to give an 18 dB deflection on 2607.

b. INPUT ATTENUATOR to "1 V"

Measure the DC Output voltage and write it down.

When switching to "3 V" and back to "1 V" the automatic attenuators will change position and here the DC Output should be exactly the same as before.

When switching to "0.3 V" and back to "1 V" the attenuators will be back in the previous positions again and the output should still be the same.

If necessary adjust P 613 (DC Att. on ZL 0012) and repeat the checks.

3.5 Frequency Response

a. OUTPUT ATTENUATOR: "x 1"
FILTERS: "Ext."
METER FUNCTION: "RMS-Lin."
AVERAGING TIME: "Fast"

Input signal to Ext. Filter Out. socket: 1000 Hz adjusted to give an 18 dB deflection on 2607.

Attenuate the input voltage 30 dB and vary the input frequency from 1–200 kHz and check that fhe DC output is linear within 0.2 dB (provided that item 4.2 is fulfilled).

If necessary adjust C 631 (Lo on ZL 0012).

Input voltage back to the previous value (18 dB deflection on 2607).

Vary the input frequency from 1–200 kHz and check that the deflection is 18 dB ± 0.2 dB.

If necessary adjust C 630 (Hi on ZL 0012).

3.6 Switching Unstability

a. INPUT ATTENUATOR: "0.1 V"
OUTPUT ATTENUATOR: "x 1"
FILTERS: "All released"
METER FUNCTION: "RMS-Lin."
AVERAGING TIME: "100 sec."

The deflection should be to the Ref. mark on the scale. (Signal input to "Direct" socket).

b. METER FUNCTION to "RMS-Log."
INPUT ATTENUATOR to "1 V"

Watch the drop in deflection carefully and see that the unstability for downwards switching (at 3 on the 10 V scale range) does not exceed 0.1 dB.

c. INPUT ATTENUATOR to "0.3 V"

The unstability for upwards switching (at 4 on the 10 V scale range) should not exceed 0.2 dB.

If necessary adjust as follows:

P 612 (113 mV on ZL 0012) should be adjusted to 113 mV DC on the slider.

P 611 (63 mV on ZL 0012) should be adjusted to 63 mV DC on the slider and then fineadjusted to minimum unstability on the downwards switching. (Attenuator from "1 V" to "0.3 V"). (When fineadjusting note if the jump is going up or down).

3.7 Balance of ZL 0014

Remove ZE 0035.

Put a small piece of insulating tape on pin 3 and shortconnect it to pin 4 (on ZL 0014).

Put ZL 0014 on an extension board (the wire from ZL 0014 should not be connected).

Measure the DC voltage on pin 1: Max. 1 mV.

Measure the DC voltage on pin 2: Max. 1 mV.

If necessary adjust P 1204 (20 dB Balance on ZL 0027) for 0 V DC on pin 1 and P 1203 (0 dB Balance on ZL 0027) for 0 V DC on pin 2.

3.8 RMS Diodes ZL 0014

OUTPUT: "AC"

ZE 0035 still removed. ZL 0014 as in item 3.7.

Connect an Oscilloscope to the housing of V 1101 (on ZL 0014) and apply 1000 Hz 0.5 V to the Output socket of 2607.

Adjust the Oscilloscope (bc Input Mode) to obtain a picture with approx. 10 doublerectified halfwaves show up and note the top level.

Attenuate the input voltage to 40 dB below 0.5 V and increase the sensitivity of the Oscilloscope 40 dB.

The present picture should have the same top level as before (the bottom level does not have to be the same, and the picture does not look as clean as before).

If necessary adjust P 1101 and 1102 (on ZL 0014).

Connect the Oscilloscope to the housing of V 1103 (on ZL 0014) and repeat the procedure for the rest of the diodes. (For the last diode a 10 dB higher input level might be necessary to give a decent picture).

If adjustment of the diodes has been found necessary check and adjust according to item 3.1.

Remove the insulating tape and the shortconnection. Reinstall. ZL 0014.

3.9 Lin/Log Converter

a. INPUT: "Direct"
INPUT ATTENUATOR: "30 mV"
REF: "50 mV RMS"
FILTERS: "All released"
OUTPUT ATTENUATOR: "x 1"
METER FUNCTION: "RMS-Lin."
AVERAGING TIME: "Fast"

Adjust "Gain Control" for 4.5 V DC Output (and full scale deflection).

b. METER FUNCTION to "RMS-Log"

DC Output should be 3.60 V (and 8 V deflection on the 10 V range).

If necessary adjust P 547 (FSD Log on ZL 0011).

c. METER FUNCTION to "RMS-Lin."
INPUT ATTENUATOR to "3 V"

Fine adjust "Gain Control" for 45 mV DC Output.

d. METER FUNCTION to "RMS-Log"

DC Output should be 0 V ± 10 mV (and 0 V deflection on 2607 meter).

If necessary adjust P 541 (0 Log on ZL 0011).

All the above mentioned procedure should be repeated as the two adjustments influence each others.

continued

3.10 Peak-Check

a.	INPUT: "Direct" INPUT ATTENUATOR: "30 mV" REF: "50 mV RMS" FILTERS: "All released" OUTPUT ATTENUATOR: "x 1" METER FUNCTION: "RMS-Lin." AVERAGING TIME: "1 sec."	Adjust "Gain Control" for a 14 dB deflection (ref. mark).
b.	METER FUNCTION to "+ Peak"	Deflection: 17 dB ± 0.1 dB.
c.	METER FUNCTION to "–Peak"	Deflection: 17 dB: ± 0.1 dB.
d.	METER FUNCTION to "+ Peak"	Adjust "Gain Control" for 4.5 V DC Output (f.s.d.).
e.	INPUT ATTENUATOR to "1 V"	DC Output: 142.3 mV ± 5 mV.
f.	METER FUNCTION to "–Peak"	DC Output: 142.3 mV ± 5 mV.
		If the instrument is out of tolerance somewhere in the checking procedure follow item 3.11 for adjustment of the Peak circuit.

3.11 Peak Adjustment

a.	INPUT: "Direct" REF: "50 mV RMS" INPUT ATTENUATOR: "30 mV" OUTPUT ATTENUATOR: "x 1" METER FUNCTION: "+ Peak-Lin." AVERAGING TIME: "1 sec."	Remove Output Amplifier ZE 0035. Turn P 545 and 546 (–30 dB Level on ZL 0011) to a fully anticlockwise position and P 543 and 544 (Top Level on ZL 0011) to mid position. Adjust P 542 (DC Balance on ZL 0011) for –3 mV ± 2 mV DC Output.
b.	METER FUNCTION to "RMS-Lin."	Put ZE 0035 back and adjust "Gain Control" for a 14 dB deflection.
c.	METER FUNCTION to "+ Peak"	Adjust P 543 (Top Level +) for a 17 dB deflection.
d.	METER FUNCTION to "–Peak"	Adjust P 544 (Top Level –) for a 17 dB deflection. Adjust "Gain Control" for 4.5 V DC Output.
e.	INPUT ATTENUATOR to "1 V"	Adjust P 545 (–30 dB Level –) for 142.3 mV DC Output ± 3 mV.
f.	METER FUNCTION to "+ Peak"	Adjust P 546 (–30 dB Level +) for 142.3 mV DC Output ± 3 mV.
g.	METER FUNCTION to "RMS" INPUT ATTENUATOR to "30 mV"	Adjust "Gain Control" for a 14 dB deflection and repeat the adjustments through items c to f because the Top Level and –30 dB adjustments influence each others. After adjustments in the Peak circuit ZL 0011 check item 3.1 b.

Block Diagram of the Output Amplifiers

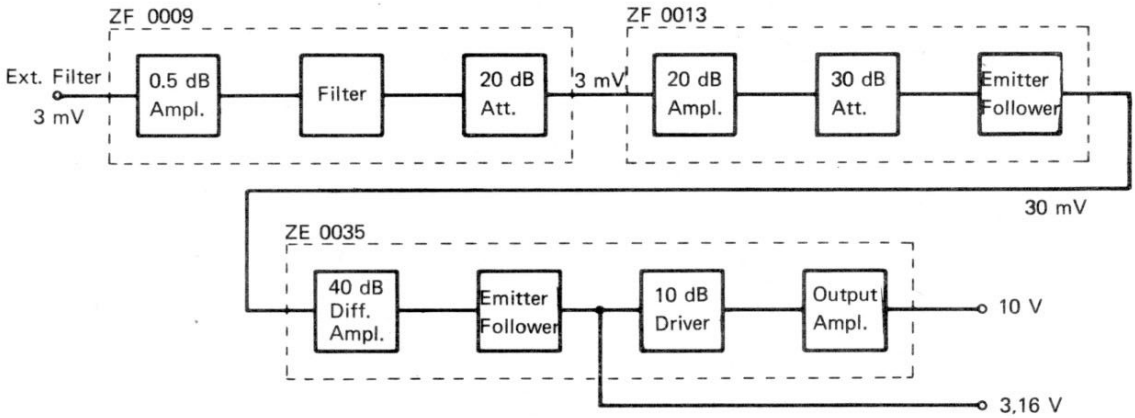

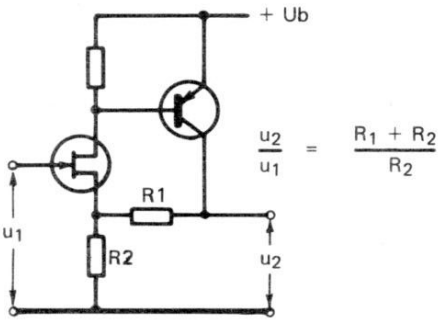

$$\frac{u_2}{u_1} = \frac{R_1 + R_2}{R_2}$$

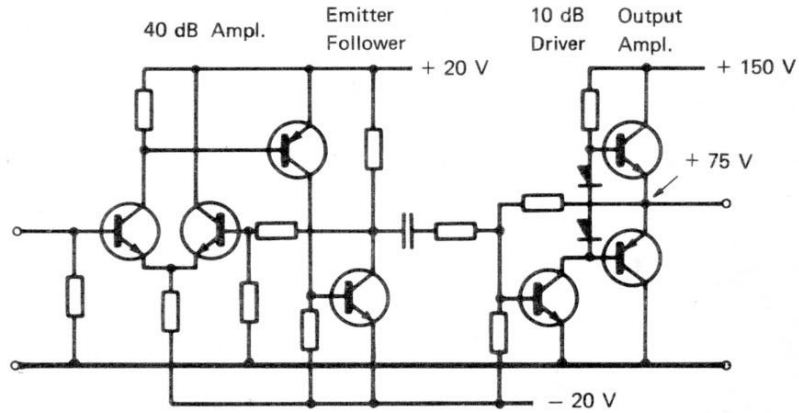

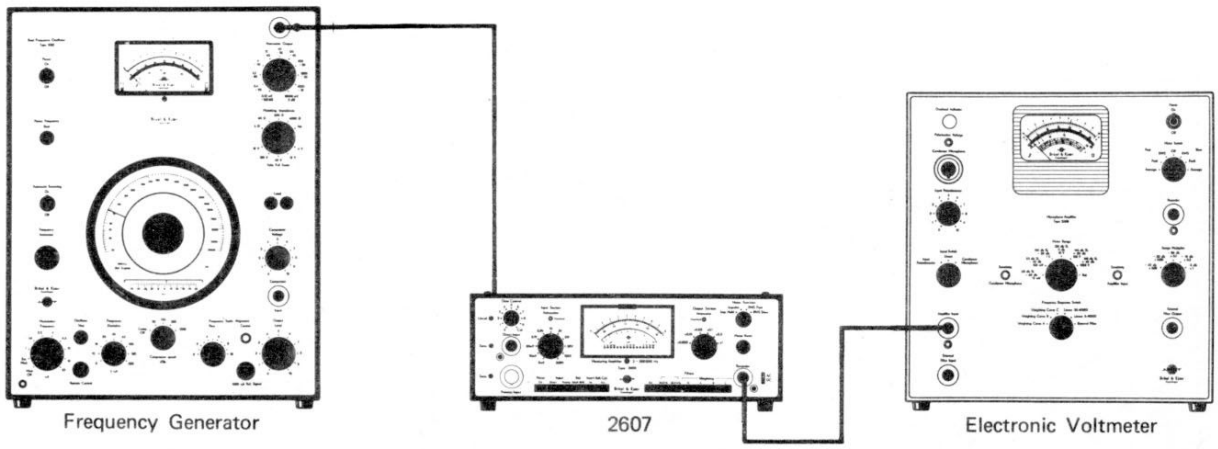

4.1 Sensitivity

FILTERS: "Ext."
OUTPUT ATTENUATOR: "x 1"
AC–DC: "AC"

Input signal to "Ext. Filter Out": 1 kHz – 1 V RMS.

"AC Output": 10 V ± 0.5 dB.

If not check the 30 mV on V 360 emitter.

continued

4.2 Frequency Response

FILTERS: "Ext."
OUTPUT ATTENUATOR: "x 1"
AC–DC: "AC"

Input signal to "Ext. Filter Out": 1 kHz adjusted to give 10 V on "Output".

Vary the frequency from 2–200000 Hz.

"Output" voltage: 10 V ± 0.2 dB.

If necessary adjust C (on ZE 0035) at 200000 Hz.

4.3 Output Attenuator

FILTERS: "Ext."
OUTPUT ATTENUATOR: "x 1"
METER FUNCTION: "RMS"
AVERAGING TIME: "Fast"

Input signal: 1 kHz adjusted to give 18 dB deflection on 2607.

Check the steps of the output attenuator compared to the attenuator of the BFO or a special Attenuator Box.

Tolerance: ± 0.1 dB (+ tolerance of the BFO attenuator).

At 200 kHz the tolerance is ± 0.2 dB.

4.4 Overload Indicator

OUTPUT ATTENUATOR: "x 0.1"
FILTERS: "Ext."
AC–DC: "AC"

Input signal to "Ext. Filter Out": 1 kHz adjusted to give exactly 56 V peak on "Output".

The "Output Section Overload" should indicate overload within ± 0.5 dB of this condition.

Check at 200 kHz if the indication is still correct and with an oscilloscope that the output voltage has not yet been limited.

If necessary adjust P 480 (on ZH 0012) until correct indication.

4.5 Output Impedance

OUTPUT ATTENUATOR: "x 1"
FILTERS: "Ext."
AC–DC: "AC"

Input signal: 1 kHz adjusted to give exactly 10 V RMS on "Output".

Load the "Output" with a resistor of 1 kΩ.

The "Output" voltage should drop max. 0.5 dB corresponding an output impedance of 50Ω.

The above mentioned check should be made at 200 kHz as well.

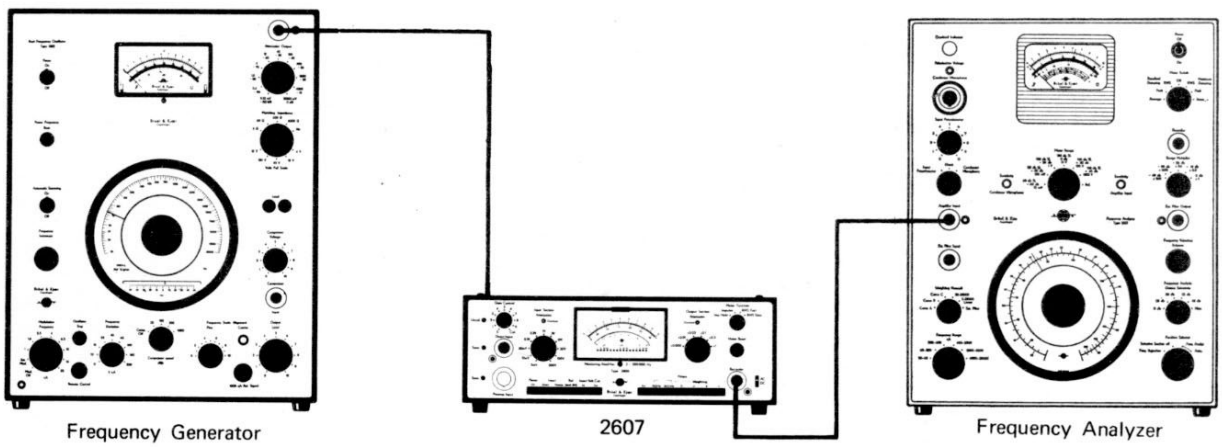

4.6 Distortion

OUTPUT ATTENUATOR: "x 1"
FILTERS: "Ext."
AC–DC: "AC"

Adjust a 1 kHz input signal to give 10 V RMS on "Output".

Set the Frequency Analyzer to Rejection Mode at 1 kHz and check the distortion which can be measured down to 0.25% only with these instruments.

However the tolerance for 2607 is 0.1% at 1 kHz and 0.3% at 50 kHz but to measure this a more complex set up is necessary.

4.7 Noise and Hum

FILTERS: "Ext."
AC–DC: "AC"

Shortconnect "Ext. Filter Out" socket.

Check noise and hum according to following scheeme:

OUTPUT ATTENUATOR	Without Filters			With Filters like follows			
	50 Hz	100 Hz	150 Hz	22.4 Hz	22.4 kHz	D	C
x 0.003	30 mV	20 mV	30 mV	160 mV	160 mV	400 mV	80 mV
x 1	2 mV	2 mV	2 mV	6 mV	6 mV	20 mV	6 mV

Simplified Diagram of Input Circuit.

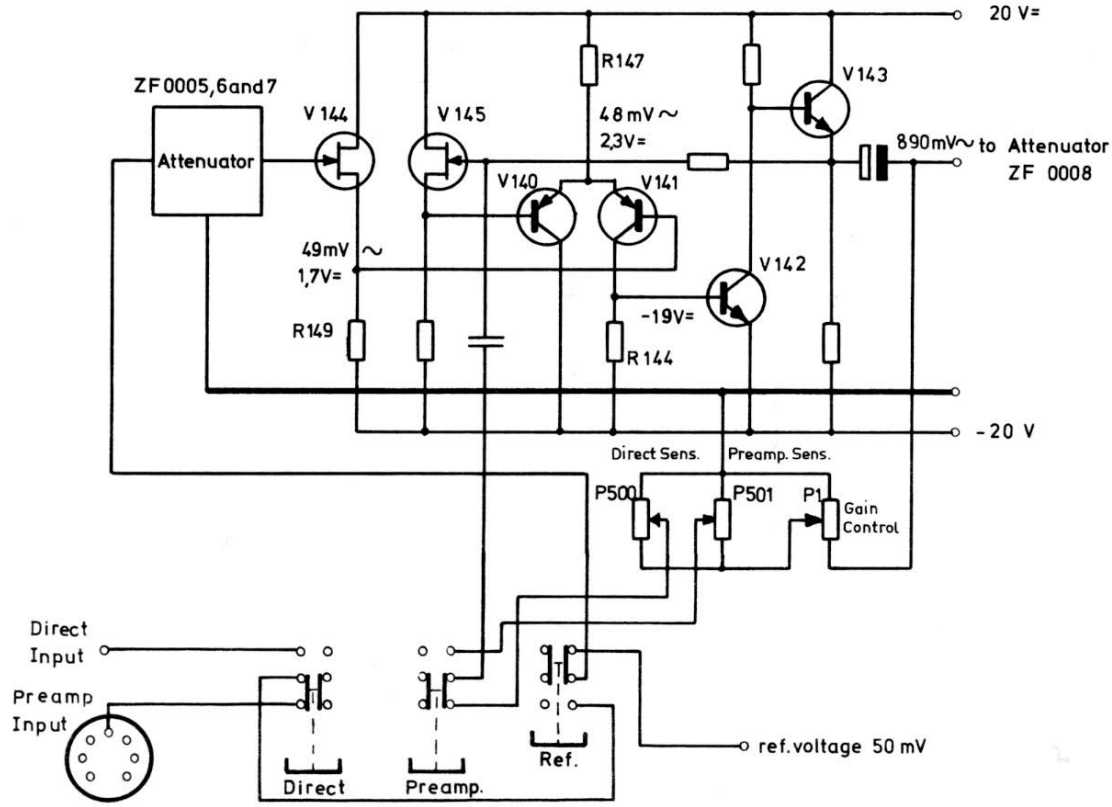

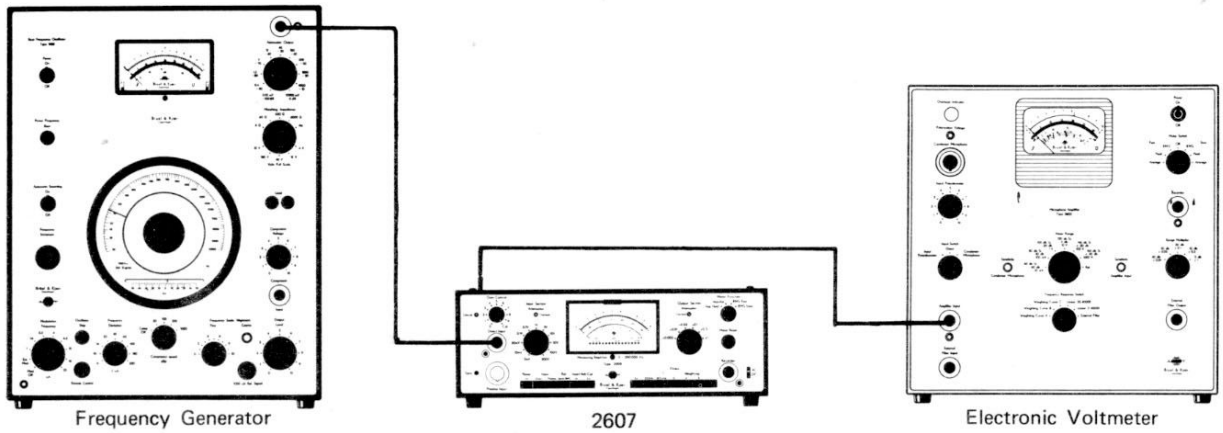

5.1 Sensitivity

GAIN CONTROL: "Cal."
INPUT: "Direct"
INPUT ATTENUATOR: "0.1 V"
FILTERS: "Ext."

Input signal to 2607 "Direct Input": 1 kHz–100 mV.

Voltmeter connected to "Ext. Filter In" socket: 1 V ± 0.5 dB (for correctly adjusted sensitivity).

The DC voltage on "Ext. Filter In" socket should be 1 V ± 1.5 V.

5.2 Frequency Response

GAIN CONTROL: "Cal."
INPUT: "Direct"
INPUT ATTENUATOR: "0.1 V"
FILTERS: "Ext."

a. Connect the BFO direct to the Electronic Voltmeter and check the frequency response of these two instruments alone. Evt. note the deviation from linear.

b. Then apply 1 kHz to "Direct Input" of 2607 and adjust the voltage to give 18 dB deflection (± 1 V range) on the voltmeter connected to "Ext. Filter In" of 2607.

Vary the frequency from 2 Hz to 200 kHz.

Deflection on the voltmeter: 18 dB $^{+0.1}_{-0.2}$ dB. (+ tolerance of the voltmeter).

If necessary adjust C 160 at 200 kHz.

continued

5.3 Input Attenuator

GAIN CONTROL: "Cal."
INPUT: "Direct"
INPUT ATTENUATOR: "0.1 V"
FILTERS: "Ext."

Input signal: 1 kHz adjusted to give 18 dB deflection on the voltmeter connected to "Ext. Filter In" socket.

Check the steps of the input attenuator compared to the attenuator of the BFO or a special Attenuator Box.

Tolerance: ± 0.1 dB (+ tolerance of the BFO attenuator).

At 200 kHz the tolerance is ± 0.2 dB.

If necessary adjust C 220–223.

5.4 Overload Indicator

GAIN CONTROL: "Cal."
INPUT: "Direct"
INPUT ATTENUATOR: "0.1 V"
FILTERS: "Ext."

Input signal: 1 kHz adjusted to give exactly 5.6 peak on "Ext. Filter In".

The "Input Section Overload" should indicate overload within ± 0.5 dB of this condition.

Check at 200 kHz if the indication is still correct and with an oscilloscope that the output has not yet been limited.

If necessary adjust P 480 (on ZH 0011) until correct overload indication.

5.5 Output Impedance

GAIN CONTROL: "Cal."
INPUT: "Direct"
INPUT ATTENUATOR: "0.1 V"
FILTERS: "Ext."

Input signal: 1 kHz adjusted to give 1 V RMS on "Ext. Filter In" socket.

Load the socket with a resistor of 200Ω.

The "Ext. Filter In" output voltage should drop max. 0.5 dB corresponding to an output impedance of 10Ω.

The above mentioned check should be made at 200 kHz as well.

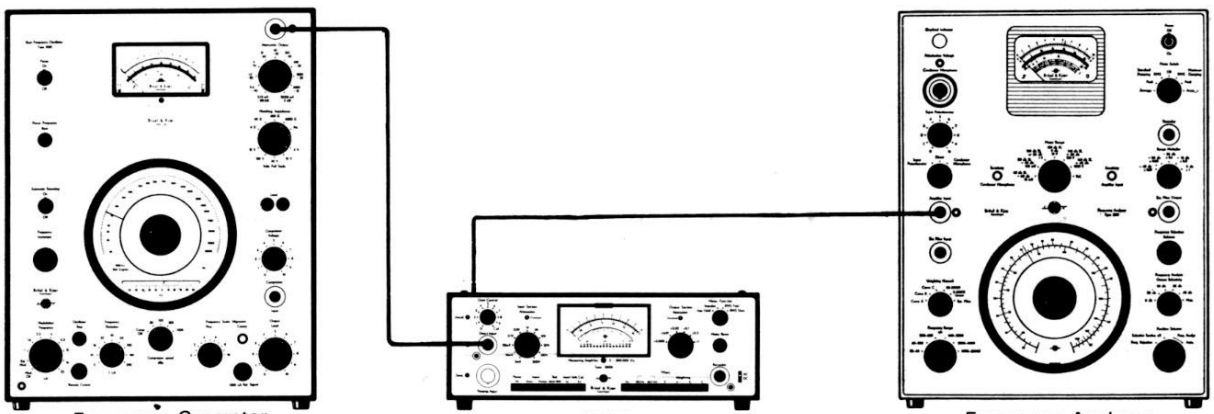

5.6 Distortion

GAIN CONTROL: "Cal."
INPUT: "Direct"
INPUT ATTENUATOR: "0.1 V"
FILTERS: "Ext."

Adjust a 1 kHz input signal to give 1 V RMS on "Ext. Filter In" socket.

Set the Frequency Analyzer to Rejection Mode at 1 kHz and check the distortion, which can only be measured down to 0.25% with these instruments.

The tolerance for Type 2607 is 0.01% at 1 kHz and 0.03% at 50 kHz, but to measure this a much more complex set up is necessary.

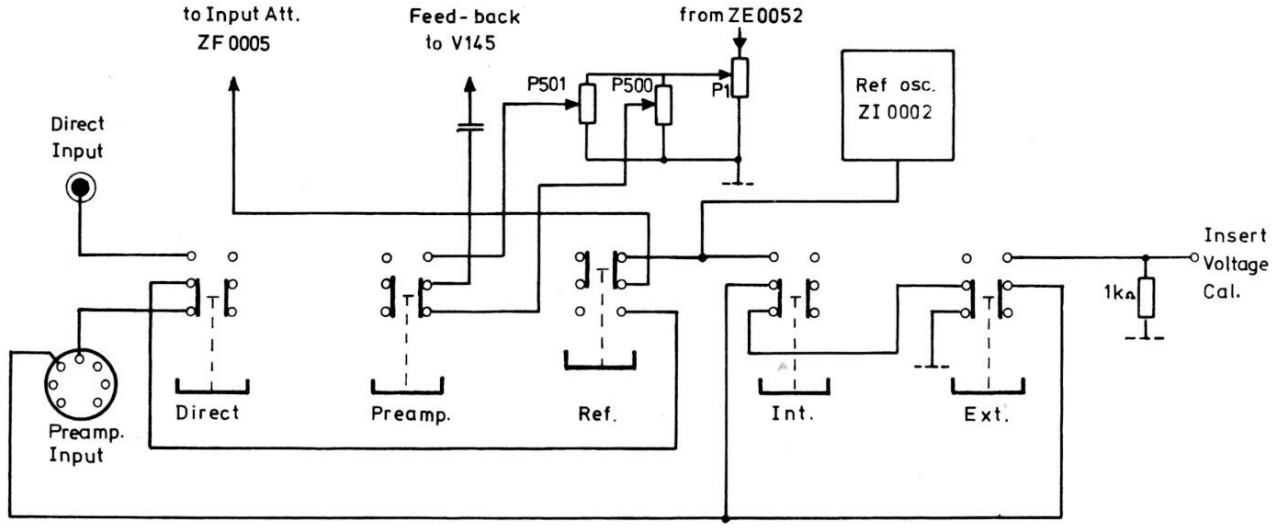

Simplified Diagram of the Calibration Facilities

5.7 Reference

a. GAIN CONTROL: "Cal."
INPUT: "Direct"
INPUT ATTENUATOR: "0.1 V"
OUTPUT ATTENUATOR: "x 1"
FILTERS: "All released"
METER FUNCTION: "RMS"
AVERAGING TIME: "Fast"

Input signal: 1000 Hz exactly 100 mV RMS.

Adjust "Sens." to full scale deflection.

b. REF: to "50 mV RMS"

The 2607 meter should deflect the ref. mark.

If necessary adjust P 520 (on ZI 0002).

Check the frequency and evt. the distortion with a Frequency Analyzer connected to the housing of P 520.

If necessary adjust the frequency of ZI 0002 to 1000 Hz.

Max. distortion 2%.

5.8 Hum

GAIN CONTROL: "Cal."
INPUT: "Direct"

Measure the hum selectively according to following scheeme:

	Input shortconnected			Input open		
INPUT ATTENUATOR	50 Hz	100 Hz	150 Hz	50 Hz	100 Hz	150 Hz
3 mV	300 µV	100 µV	300 µV	630 µV	630 µV	630 µV
10 mV	100 µV	35 µV	100 µV	210 µV	210 µV	210 µV
30 mV–300 V	60 µV	50 µV	60 µV	60 µV	50 µV	60 µV

valid from serial no. 308927

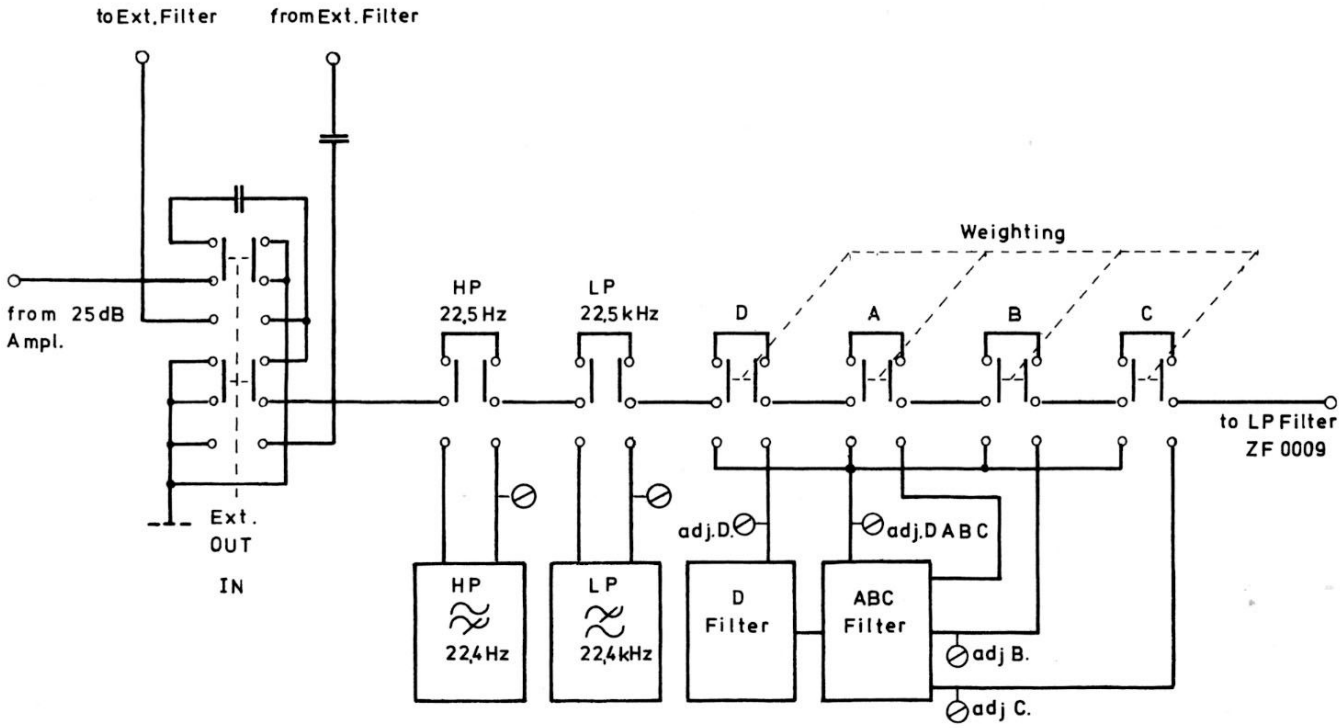

6.1 1000 Hz Level

a. INPUT ATTENUATOR: "30 mV"
REF: "50 mV RMS"
OUTPUT ATTENUATOR: "x 1"
METER FUNCTION: "RMS"
AVERAGING TIME: "Fast"
FILTERS: "All released"

Adjust "Gain Control" to 18 dB deflection on 2607.

FILTER to "22.4 Hz", "22.4 kHz" and "D–A–B–C" positions.

Check that the deflection is 18 dB ± 0.2 dB in all positions.

If not adjust.

22.4 Hz	filter level	by P 701	on ZS 0167
22.4 kHz	filter level	by P 700	
A–B–C–D	network levels	by P 705	
B	network level	by P 704	
C	network level	by P 703	
D	network level	by P 702	

continued