115

K25-109

Brüel & Kjær

1023

Sine Generator

Valid from serial no. 739157

037-0226

Service

1023

Sine Generator

Valid from serial no. 739157

037-0226

Consisting of:

1023		page	date
Service Instruction		0—1	1.79
-		0—2	5.75
Technical Description		1—1	5.75
-		1—2	5.75
-		1—3	5.75
-		1—4	5.75
Checking Procedure		2—1	5.75
-		2—2	5.75
Adjustment Procedure		3—1	5.75
-		3—2	5.75
-		3—3	5.75
ZD 0117	Frequency Counter	1 —	11.75
ZD 0118	-		
ZE 0151	Output Circuits, Power Supply	1	1.79
		2	1.79
ZI 0032	Oscillator Circuits	1	1.79
		2	1.79
Block Diagram with Parts List		4—1	1.79

Trouble Shooting

If any faults should occur please check the instrument according to the procedure outlined below.

When a fault has been traced and corrected, the voltages and adjustments influenced by the correction must be rechecked. The complete instrument should then be tested according to the Checking Procedure to make sure that all basic functions are operative.

The tolerances given in these notes are intended for use as a guide for adjustments.

Before correcting any apparent deviation make sure that the measuring instrument has tolerances small enough not to affect the measurements.

Modifications

Due to the constant technical progress the instrument will be modified from time to time in order to provide continously improved performance.

For this reason there may be small differencies between the instrument and the Service Instruction.

However, the local Representative Service is in possession of all information regarding the modifications that have been made.

Spare Parts

Please state type and serial number of the instrument when ordering spare parts.

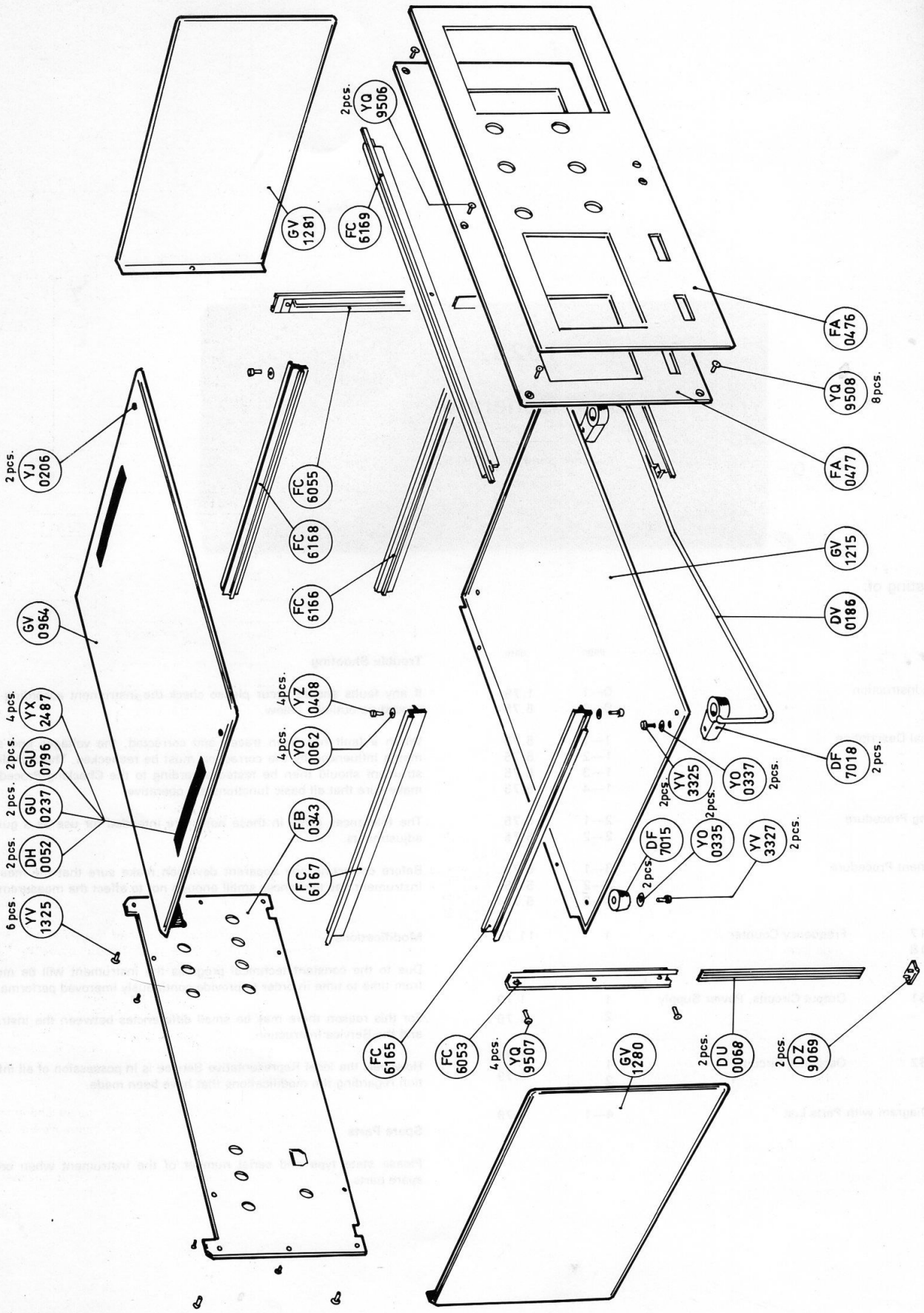
GV 1281
2pcs. YQ 9506
FC 6169
FA 0476
YQ 9508 8pcs.
FA 0477
2 pcs. YJ 0206
FC 6055
FC 6168
FC 6166
GV 1215
DV 0186
GV 0964
4pcs. YZ 0408
4pcs. YO 0062
4 pcs. YX 2487
2 pcs. GU 0796
2 pcs. GU 0237
2pcs. DH 0052
6 pcs. YY 1325
FB 0343
FC 6167
DF 7018 2 pcs.
YO 0337 2pcs.
YY 3325 2pcs.
DF 7015 2 pcs.
YO 0335 2pcs.
YY 3327 2 pcs.
FC 6165
FC 6053
4 pcs. YQ 9507
GV 1280
2 pcs. DU 0068
2 pcs. DZ 9069

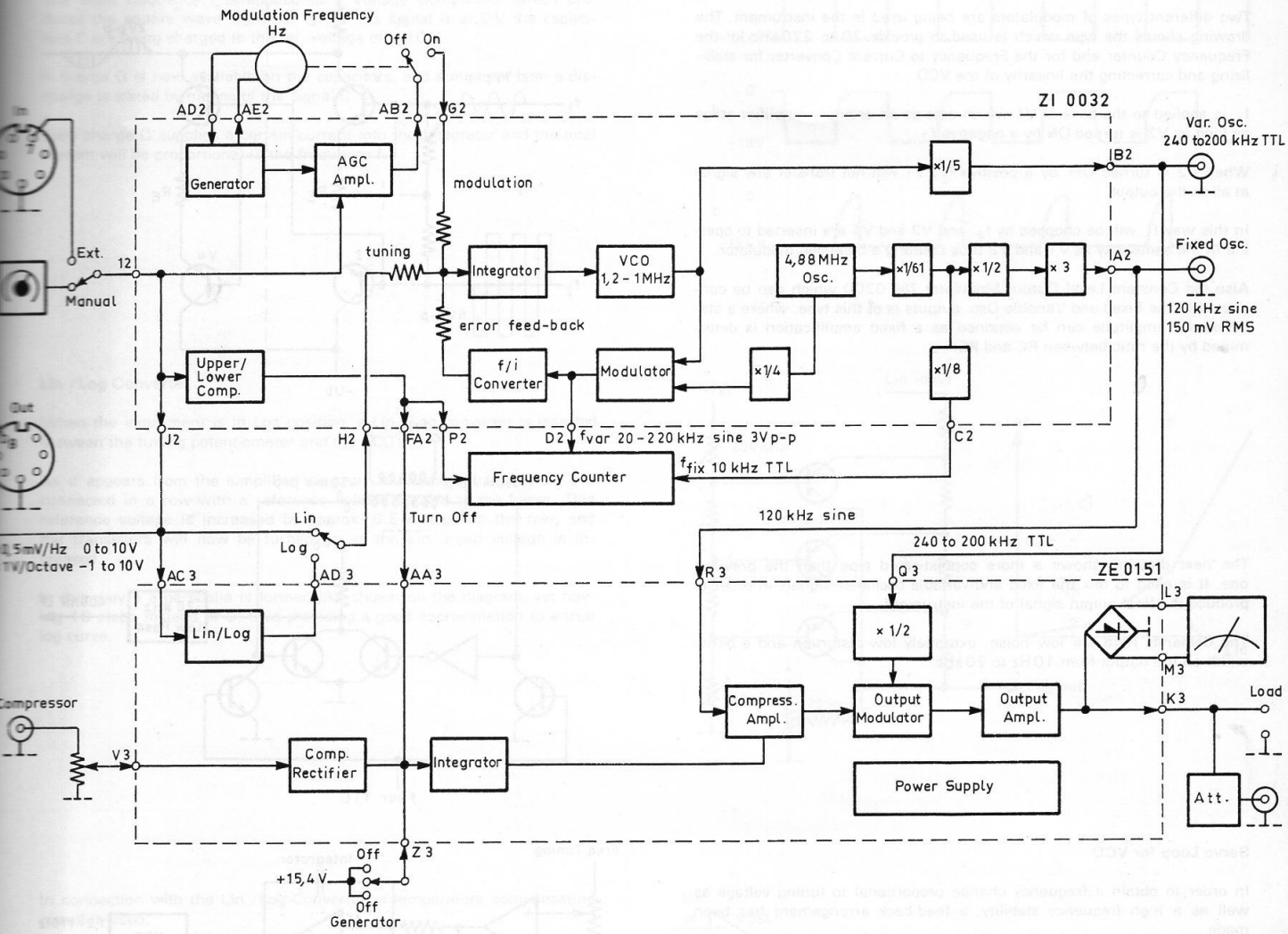

General

The Sine Generator Type 1023 is a high quality signal source which covers a frequency range from 10 Hz to 20 kHz.

The output signal is produced by mixing a Fixed Oscillator Signal of 120 kHz with a Variable Oscillator signal of 240 to 200 kHz divided by 2.

The Fixed Oscillator signal is produced by a 4,88 MHz Crystal Oscillator which is divided by 61 and by 2 and multiplied by 3 after which the 120 kHz signal is applied to the Compressor Amplifier where the amplitude of the signal is controlled by a DC voltage proportional to the Compressor input signal.

The Variable signal is created by a Voltage Controlled Oscillator with a frequency range of 1,2 to 1 MHz which is divided by 5. In order to linearize and stabilize the VCO, an error feed-back arrangement has been made as explained later in the description.

The Variable Oscillator signal can have a linear or a logarithmic relationship to the DC tuning voltage of 0 to 10 V. In Lin. mode the tuning voltage is 0,5 mV per Hz and in Log mode 1 V per octave with 0 V at 20 Hz and thus —1 V at 10 Hz.

The output signal of the Generator can be modulated by applying a pulsating DC voltage to the VCO. Modulation frequencies of 1 — 2,5 — 6,3 and 16 Hz can be selected while the frequency deviation is ± 10% of the center frequency up to a maximum of ± 250 Hz which is remained constant from 2,5 kHz to 20 kHz center frequency.

The Block Diagram is extremely helpful in case of Trouble Shooting as it contains information about signal levels and waveforms between the circuit boards.

However, there are a couple of circuit details in the instrument that need a further discussion:

Modulators

Two different types of modulators are being used in the instrument. The drawing shows the type which is used to provide 20 to 220 kHz for the Frequency Counter and for the Frequency to Current Converter for stabilizing and correcting the linearity of the VCO.

f_1 is applied to the base of V1 which acts as an ordinary amplifier stage as long as V2 is turned ON by a negative f_2.

When V2 is turned OFF by a positive f_2, V1 will not transfer any signal at all to the output.

In this way f_1 will be chopped by f_2, and V3 and V4 are inserted to operate in the same way as V1 and V2 thus creating a balanced modulator.

Also the Constant Level Output Modulator ZM 0200 which can be connected to the Fixed and Variable Osc. outputs is of this type, where a stabil output amplitude can be obtained as a fixed amplification is determined by the ratio between RC and RE.

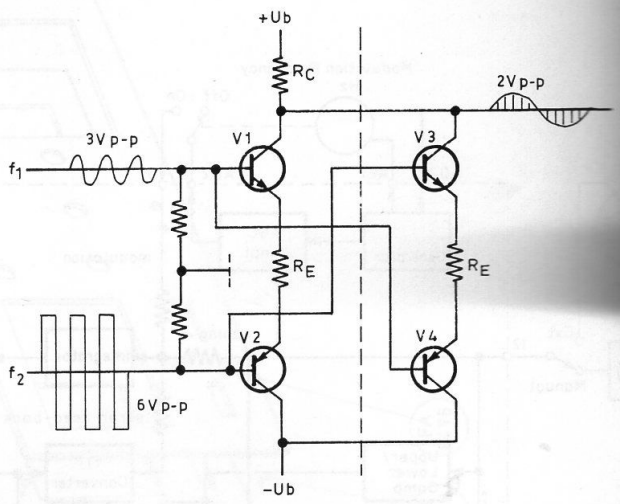

The next drawing shows a more sophisticated type than the previous one. It is used to mix the fixed and variable oscillator signals in order to produce the final output signal of the instrument.

The demands here are low noise, extremely low distortion and a bandwidth on the output from 10 Hz to 20 kHz.

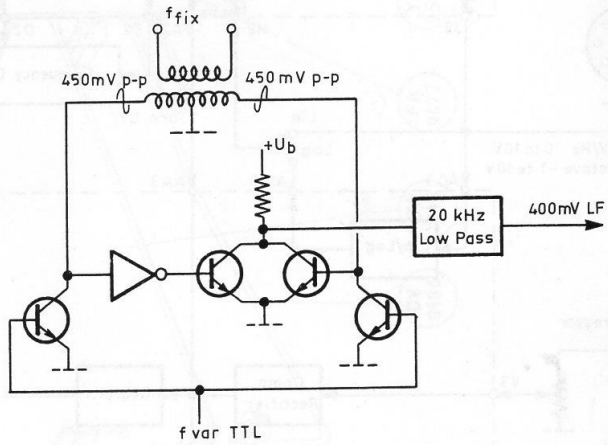

Servo Loop for VCO

In order to obtain a frequency change proportional to tuning voltage as well as a high frequency stability, a feed-back arrangement has been made.

From the Frequency Tuning potentiometer a positive current is applied to an Integrator the output of which is used to tune the Voltage Controlled Oscillator.

The 1,2 to 1 MHz output signal from this oscillator is mixed with a fixed frequency of 1,22 MHz thus producing a signal from 20 to 220 kHz.

A Frequency to Current converter supplies a current proportional to frequency, and it now appears that the VCO will be tuned to a frequency which causes the negative current output from the converter to be exactly the same value as the positive tuning current.

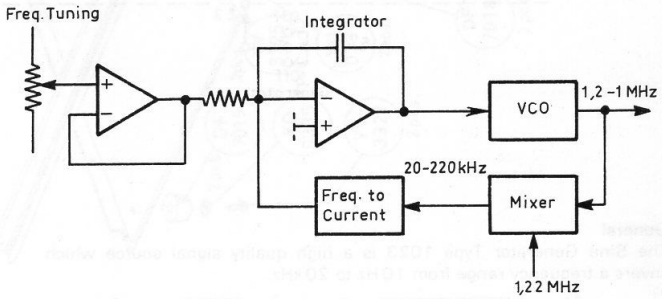

Frequency to Current Converter

The basic definition of this converter is that:

Current i = charge Q × Frequency f and

charge Q = Capacitors C × Voltage V.

This indicates that the stability of the system is given by the charge Q which is created by means of a very stabil ref. voltage V of —10 V and a number of capacitors C, which are of different temperature coefficient for max. stability.

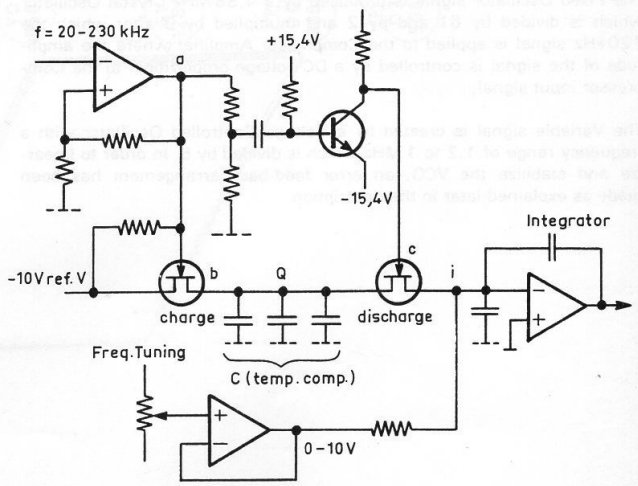

The input frequency f is applied to a Voltage Comparator which produces the square wave signal a. When this signal is at 0 V the capacitors C are being charged to the ref. voltage of —10 V.

A charge Q is now available on the capacitors, and a moment later a discharge is stated by means of the signal C.

Each charge Q supplies a certain current into the Integrator and the total current will be proportional to the frequency f.

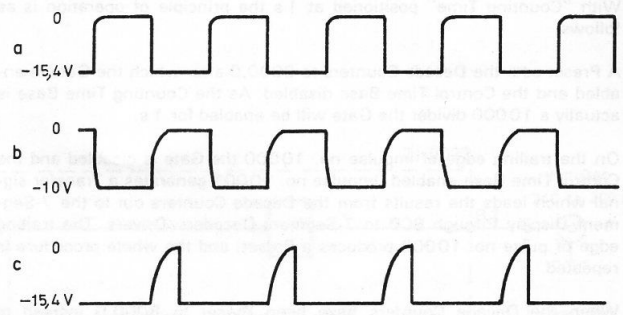

Lin./Log Converter

When the instrument is in Log position, a Lin./Log converter is inserted between the tuning potentiometer and the VCO.

As it appears from the simplified diagram, a number of transistors are connected in a row with a reference voltage applied to the bases. This reference voltage is increased by approx. 0,5 V steps up the row, and the transistors will now be turned on as the Lin. input voltage is increased.

In this way a a parabolla is formed like shown on the diagram, yet having 18 steps instead of 3, thus providing a good approximation to a true log curve.

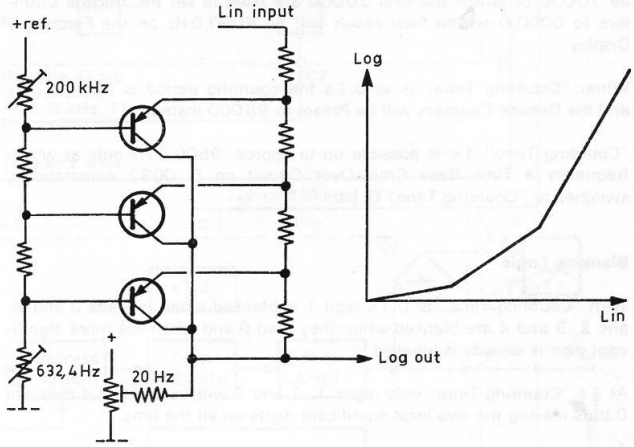

In connection with the Lin./Log Converter, a temperature compensating circuit is used.

V342 is acting as a temperature detector as the forward voltage across it is temperature dependent. The voltage drop across V342 is amplified by V357, the resulting signal being present across R356.

By means of R342 + 355 is now to the Linear input voltage added a voltage which is proportional to the forward voltage across V342 and thus temperature compensated.

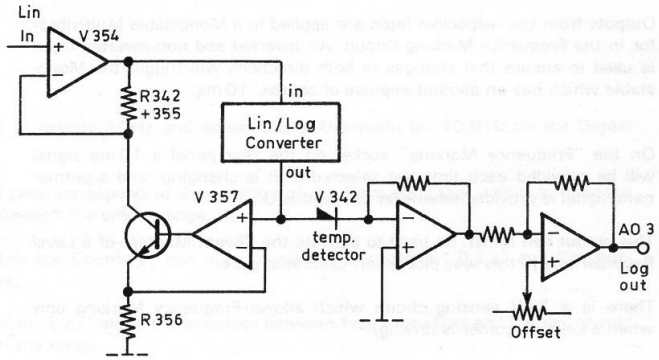

Frequency Counter

With "Counting Time" positioned at 1 s the principle of operation is as follows:

A Preset sets the Decade Counters to 8000,0 after which the Gate is enabled and the Control Time Base disabled. As the Counting Time Base is actually a 10000 divider the Gate will be enabled for 1 s.

On the trailing edge of impulse no. 10000 the Gate is disabled and the Control Time Base enabled. Impulse no. 10001 generates a Transfer signal which leads the results from the Decade Counters out to the 7-Segment Display through BCD to 7-Segment Decoders/Drivers. The trailing edge of pulse no. 10003 produces a Preset, and the whole procedure is repeated.

When the Decade Counters have been Preset to 8000,0 instead of 0000,0 it is due to the fact that a Gate input of 20 kHz should read 0 Hz and 220 kHz should read 20 kHz. And 20 kHz during 1 s provides exactly 20000 pulses which sets the Decade Counters to 0000,0.

If f. inst. the Gate input is 70 kHz, the number of pulses during 1 s will be 70000 of which the first 20000 are used to set the Decade Counters to 0000,0 so the final result will be 5000,0 Hz on the Frequency Display.

When "Counting Time" is at 0,1 s the counting period is 100 ms only and the Decade Counters will be Preset to 98000 instead.

"Counting Time" 1 s is possible up to approx. 9500,0 Hz only at which frequency a Time Base Cross-Over Circuit on ZI 0032 automatically switches to "Counting Time" 0,1 s.

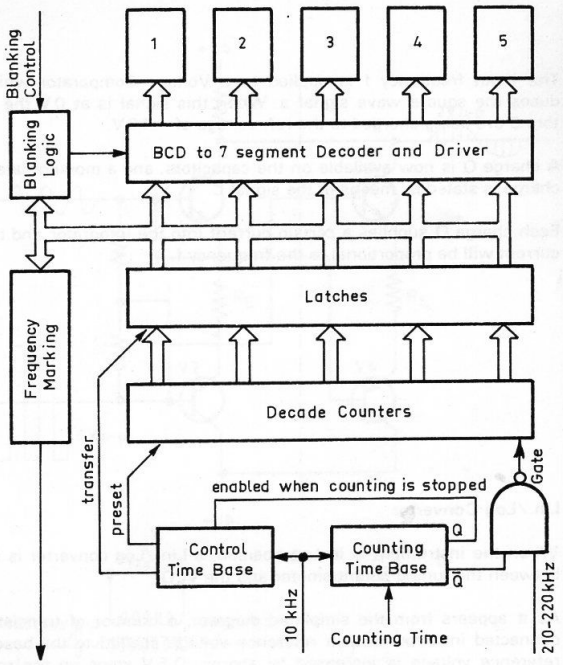

Blanking Logic

With "Counting Time" at 0,1 s digit 1 is blanked when it reads 0 and digits 2, 3 and 4 are blanked when they read 0 and when the more significant digit is already is blanked.

At 1 s "Counting Time" only digits 1, 2 and 3 will be blanked if they are 0 thus leaving the two least significant digits on all the time.

All digits are blanked when the frequency is tuned out of range.

Frequency Marking

By means of a "Frequency Marking" selector on the rear panel it is possible to choose marking intervals controlled by digits 2, 3 or 4.

Outputs from the respective latch are applied to a Monostable Multivibrator in the Frequency Marking Circuit. An inverted and non-inverted input is used to ensure that changes in both directions will trigger the Monostable which has an aoutput impulse of approx. 10 ms.

On the "Frequency Marking" socket on the rear panel a 10 ms signal will be provided each time the selected digit is changing, and a permanent signal is provided whenever the digit is 0.

This output can f. inst. be used to activate the "Event Marker" of a Level Recorder and in this way plot a non-calibrated paper.

There is a 24 V sensing circuit which allows Frequency Marking only when a Level Recorder is driving.

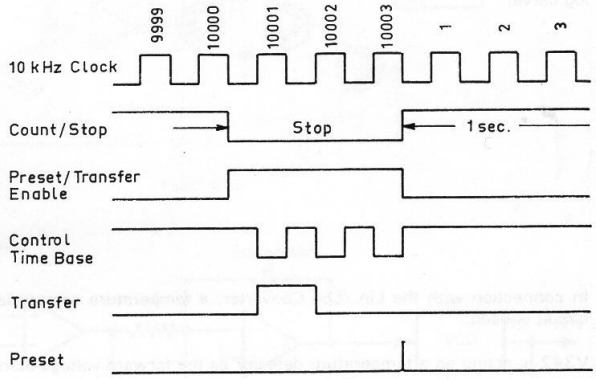

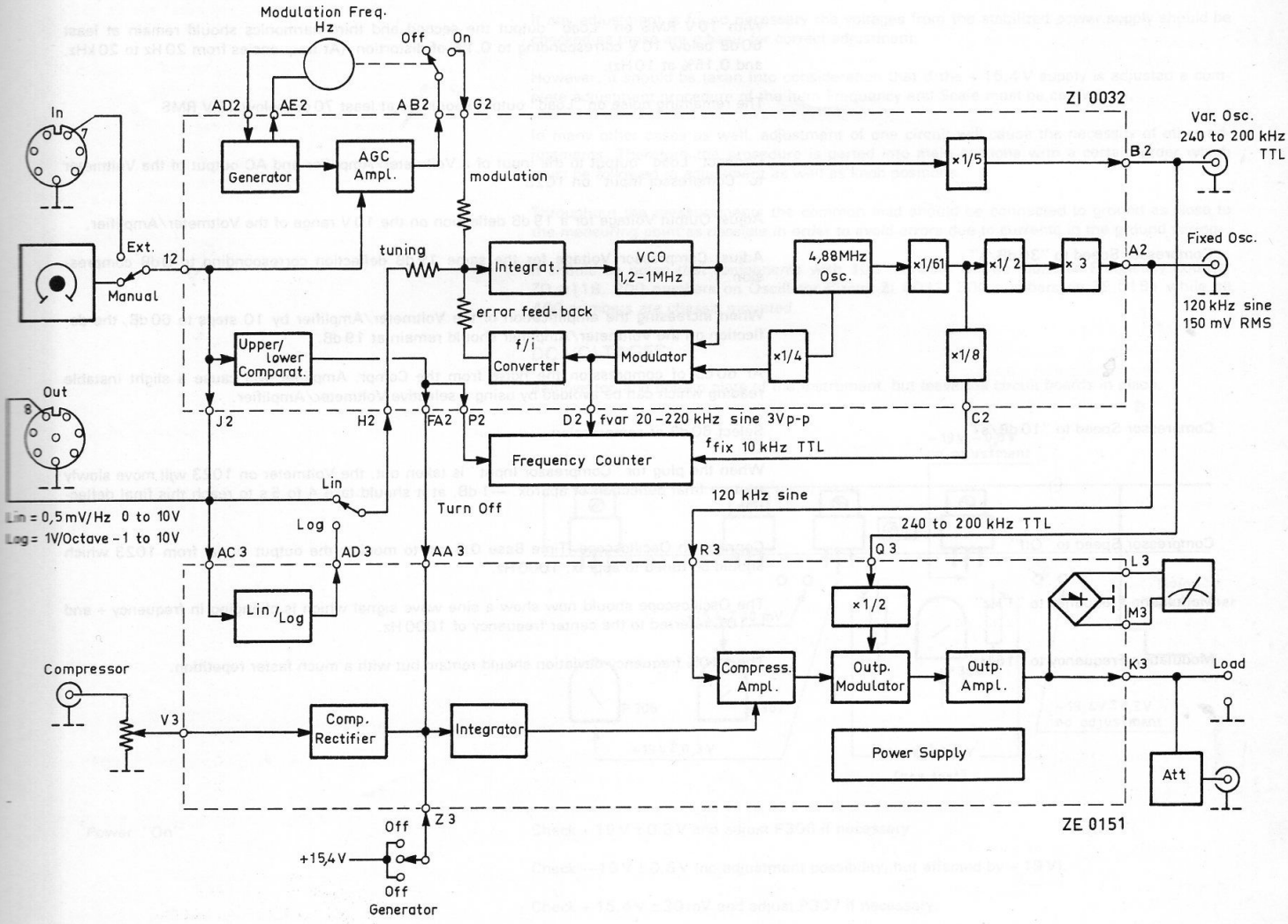

Generator: "On"
Ref. Signal: "Off"
Sweep Control: "Manual-Log"
Compressor Speed: "Off"
Output Voltage: "5"
Modulation Frequency: "Off"
Output Attenuator: "Load"
Counting Time: "1 s"

Set Frequency Dial to exactly 10 Hz and adjust Scale Alignment for 10,0 Hz on the Digital Frequency Display.

The Display should now correspond to the position of the Frequency Dial within a tolerance of ± 3% of reading through the whole range.

At approx. 9500,0 Hz the Counting Time is automatically changed to "0,1 s" and the decimal point disappears.

rear Frequency Range Adj. "Full"

With Sweep Control in "Lin." mode the accuracy between Frequency Dial and Display should be ± 200 Hz through the range.

Ref. Signal to "On"

The Frequency Display should now read between 970 and 1030 Hz.

Ref. Signal to "Off"

Turn Frequency Dial out of range and check on the Meter that the Output signal disappears and that the Frequency Display is blanked.

Sweep Control to "Manual-Log"

Connect an RMS reading Voltmeter to "Load" and adjust Output Voltage for 10 V RMS at an output frequency of approx. 1000 Hz.

The 1023 Voltmeter should now read full scale ± 2%.

Reduce Output Voltage to a reading of f. inst. —2 dB and check the frequency response to be within ± 0,2 dB referred to 1 kHz from 10 Hz to 20 kHz.

Turn Output Voltage to read 10 V RMS deflection on the 1023 Voltmeter at a frequency of 1 kHz.

Connect a 15 Ω/10 W resistor to the "Load" terminals and check that the output voltage does not drop more than 0,2 dB.

Increase Output Voltage and check that the Distortion lamp comes on at an output voltage of approx. 11,5 V RMS into 15 Ω corresponding to an output current of 0,76 A RMS.

1023.2 Checking Procedure

Generator to "Off"

Disconnect the 15 Ω resistor and check the distortion with a Frequency Analyzer like f. inst. Type 2010.

With 10 V RMS on "Load" output the second and third harmonics should remain at least 60 dB below 10 V corresponding to 0,1% of distortion. (At frequencies from 20 Hz to 20 kHz, and 0,15% at 10 Hz).

The remaining noise on "Load" output should be at least 70 dB below 10 V RMS.

Connect "Load" output to the input of a Voltmeter/Amplifier and AC output of the Voltmeter to "Compressor Input" on 1023.

Adjust Output Voltage for a 19 dB deflection on the 10 V range of the Voltmeter/Amplifier.

Compressor Speed to "30 dB/s"

Adjust Compressor Voltage for the same 19 dB deflection corresponding to 0 dB compression.

When increasing the amplification of the Voltmeter/Amplifier by 10 steps to 60 dB, the deflection on the Voltmeter/Amplifier should remain at 19 dB.

At 60 dB of compression the noise from the Compr. Amplifier will cause a slight instable reading which can be avoided by using a selective Voltmeter/Amplifier.

Compressor Speed to "10 dB/s"

Select 60 dB of compression.

When the plug for "Compressor Input" is taken out, the Voltmeter on 1023 will move slowly up to a final deflection of approx. —1 dB, at it should take 4 to 5 s to reach this final deflection.

Compressor Speed to "Off"

Connect an Oscilloscope (Time Base 0,5 ms) to monitor the output signal from 1023 which should be tuned to appr ox. 1000 Hz.

Modulation Frequency to "1 Hz"

The Oscilloscope should now show a sine wave signal which is changing in frequency + and —10% referred to the center frequency of 1000 Hz.

Modulation Frequency to "16 Hz"

The ± 10% frequency deviation should remain but with a much faster repetition.

If any adjustment is found necessary the voltages from the stabilized power supply should be checked as these are a basis for correct adjustment.

However, it should be taken into consideration that if the + 15,4 V supply is adjusted a complete adjustment procedure of the item Frequency and Scale must be carried out.

In many other cases as well, adjustment of one circuit will cause the necessity of other adjustments. Therefore the procedure is parted into main sections with a certain order which must be followed in adjustment as well as knob positions.

Throughout the measurements the common lead should be connected to ground as close to the measuring point as possible in order to avoid errors due to currents in the ground wiring.

It should be noted that components with 100 numbers will be found on Frequency Counter ZD 0118, 200 numbers on Oscillator Circuit ZI 0032, 300 numbers on ZE 0151 while all 400 numbers are chassis mounted.

DC VOLTAGES

Remove top and bottom plate of the instrument, but leave the circuit boards in place.

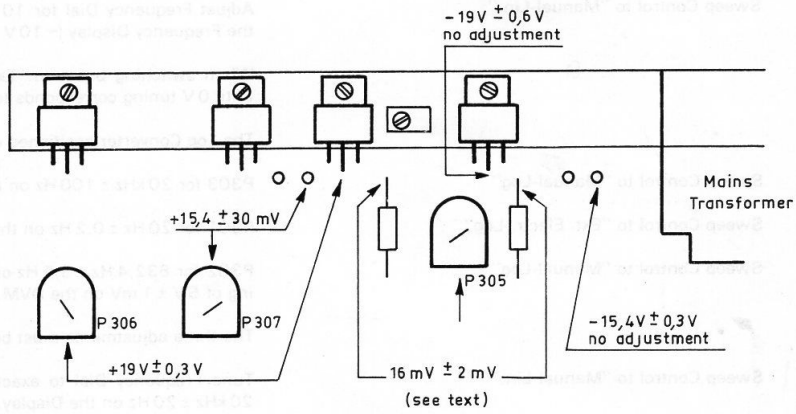

Power: "On"

Check + 19 V ± 0,3 V and adjust P306 if necessary.

Check —19 V ± 0,6 V (no adjustment possibility, but affected by + 19 V).

Check + 15,4 V ± 30 mV and adjust P307 if necessary.

Check —15,4 V ± 0,3 V (no adjustment possibility, but affected by + 15,4 V).

Check + 5 V ± 0,25 V on the supply rail on the Frequency Counter board.

Output Voltage to "0"

Connect the Voltmeter to the two resistors as shown and adjust P305 if necessary for 16 mV ± 2 mV (avoid a common ground connection between 1023 and the Voltmeter).

Connect the Voltmeter to the "Load" terminals and adjust P304 for 0 V ± 10 mV.

FIXED AND VARIABLE OSCILLATORS

Ref. Signal: "Off"
Sweep Control: "Manual-Lin."
Modulation Frequency: "Off"
Counting Time: "0,1 s"
rear Freq. Range Adj.: "Full"

The Fixed Oscillator is Crystal controlled and not adjustable, while the Variable Oscillator is a voltage controlled LC oscillator where the adjustment of L determines only the range of the oscillator, and not the output frequency and stability.

Thus the following procedure for adjusting the range of the VCO should be used only if a fault has been repaired in one of the two oscillators.

Position the instrument on its right end with the front towards the operator and ZI 0032 swung out on the table.

Connect a Frequency Counter to "Fixed Osc." socket on the rear panel and check the frequency to be 120 kHz ± 5 Hz.

Turn P208 fully clockwise (from component side) in order to enable a Frequency Display below 5 Hz.

Connect a Digital Voltmeter to ES2 point on ZI 0032.

Turn Frequency Dial down to approx. 0 Hz on the Lin. Scale, and fineadjust for 0 — 2 Hz on the Digital Frequency Display (Use Scale Alignment for fineadjustment).

The DVM should now read 8 V ± 50 mV and if not adjust L201 from the bottom side of ZI 0032 to such a position where 8 V ± 50 mV is obtained on the DVM with 0 — 2 Hz on the Digital Display. (Fineadjust Frequency Dial and Scale Alignment if necessary).

FREQUENCY AND SCALE

Ref. Signal: "Off"
Sweep Control: "Manual-Lin."
Modulation Frequency: "Off"
Counting Time: As required

Position the instrument on its right end with the front towards the operator and ZI 0032 swung out on the table.

Connect a Digital Voltmeter to a + 15 V terminal on ZI 0032 (common to closest groundpoint) and fineadjust P307 on ZE 0151 for + 15,4 V ± 30 mV.

rear Freq. Range Adj.: "Full"

Connect the DVM to point Q2 on ZI 0032 and adjust P202 for —1,35 V ± 3 mV.

Disconnect DVM and swing ZI 0032 back to its proper position as this will ensure a more exact adjustment of the following. All the potentiometers should be adjusted through holes in the bottom, while C273 can be reached from the top.

Now use an 8-pin plug JP 0802 for making a shortconnection between pins 2 and 7 on "Frequency Control Voltage In" socket and another plug for connection of a Digital Voltmeter to pin 8 and 2 (common) on "Freq. Control Voltage Out" socket.

Turn P208 fully counterclockwise (from bottom side).

Sweep Control to "Ext. Electr.-Lin."
Scale Alignment to Mid position

Adjust P206 for 0 V ± 1 mV on the DVM.

Adjust P203 for 0 Hz ± 1 Hz on the Frequency Display (~ 0 V tuning).

Sweep Control to "Manual-Lin."

Adjust Frequency Dial for 10 V ± 2 mV on the DVM and adjust C273 for 20 kHz ± 20 Hz on the Frequency Display (~ 10 V tuning).

When switching between "Ext. Electr." and "Manual" P203 and C273 should be adjusted until 0 V tuning corresponds to 0 Hz ± 1 Hz and 10 V tuning corresponds to 20 kHz ± 20 Hz.

The Log Converter positioned on ZE 0151 is adjusted as follows:

Sweep Control to "Manual-Log"

P303 for 20 kHz ± 100 Hz on the Frequency Display.

Sweep Control to "Ext. Electr.-Log"

P301 for 20 Hz ± 0,2 Hz on the Frequency Display.

Sweep Control to "Manual-Log"

P302 for 632,4 Hz ± 3,5 Hz on the Frequency Display with Frequency Dial adjusted to a reading of 5 V ± 1 mV on the DVM.

The three adjustments must be repeated as they influence each others.

Sweep Control to "Manual-Lin."

Tune Frequency Dial to exactly 20 kHz and adjust P207 for 10 V ± 10 mV on the DVM or 20 kHz ± 20 Hz on the Display.

Tune Frequency Dial to exactly 0 Hz Lin. Scale and adjust P201 for 0 V ± 1 mV on the DVM or 0 Hz ± 2 Hz on the Display.

The two adjustment must be repeated till both conditions are obtained.

Finally P208 should be adjusted to such a position that an automatic blanking of the Frequency Display takes place at a frequency between 4,5 Hz and 5,5 Hz.

If the tuning potentiometer has been replaced P201 should be set to mid position and the potentiometer mechanically positioned to produce 0 V on the DVM at 0 Hz Lin. on the scale.

OUTPUT VOLTAGE, METER, MODULATION AND COMPRESSOR

Generator: "On"
Ref. Signal: "Off"
Sweep Control: "Manual-Log"
Compressor Speed: "Off"
Modulation Frequency: "Off"
Output Attenuator: "Load"

Position the instrument on its right end with the front towards the operator and ZI 0032 swung out on the table.

Connect an Oscilloscope with 1:10 Probe to the junction between R235 and 240 and adjust trimmer C272 for max. which should be approx. 4 V peak to peak.

Connect an RMS Voltmeter to "Fixed Osc." socket.

rear Freq. Range Adj.: "Full"

Now connect a 10 kΩ resistor across the terminals at L203 and adjust L202 for max. 120 kHz output.

Connect the 10 kΩ resistor across the terminals at L202 and adjust L203 for max. 120 kHz output.

Finally adjust P204 for 150 mV RMS ± 15 mV on "Fixed Osc." socket.

Output Voltage to "5"

With Frequency Dial at approx. 1000 Hz L305 on ZE 0151 should be adjusted for max. deflection on 1023 meter.

Connect an RMS Voltmeter to rear "Load" socket and adjust "Output Voltage" for exactly 10 V RMS on the Voltmeter.

Adjust P308 for 10 V deflection on 1023 Meter.

Change Frequency Dial to 20 kHz and adjust P310 for 10 V — 0,1 dB.

Change Frequency Dial back to approx. 1000 Hz and connect a 15 Ω/10 W resistor to the "Load" terminals on the front.

Now P312 should be adjusted to such a position that there is no light in the "Distortion" lamp with 10,5 V RMS on rear "Load" output while at 11,5 V RMS it should start lightening up. (10,5 V into 15 Ω corresponds to 0,7 A).

Disconnect the 15 Ω resistor and connect an Oscilloscope til point AB2 on ZI 0032.

Modulation Frequency to "16 Hz"

With a Frequency Display of 1000 Hz P205 should be adjusted for 1 V peak to peak ± 10%.

Modulation Frequency to "Off"

Adjust "Output Voltage" for a deflection on 1023 of —2 dB below full scale.

Compressor Speed to "1000"

Connect "Load" socket to "Compressor Input" and adjust Compressor Voltage for —2 dB.

P309 should now be adjusted for 10,5 V ± 0,2 V on V351 pin 6 which can be reached only from the bottom side.

Connect "Load" socket to a Selective Voltmeter and adjust for an output signal of 10 V at 1000 Hz.

Generator to "Off"

Adjust C337 for min. 1000 Hz output which should be approx. 80 dB below 10 V.

Circuit and Layout Diagrams with Parts List

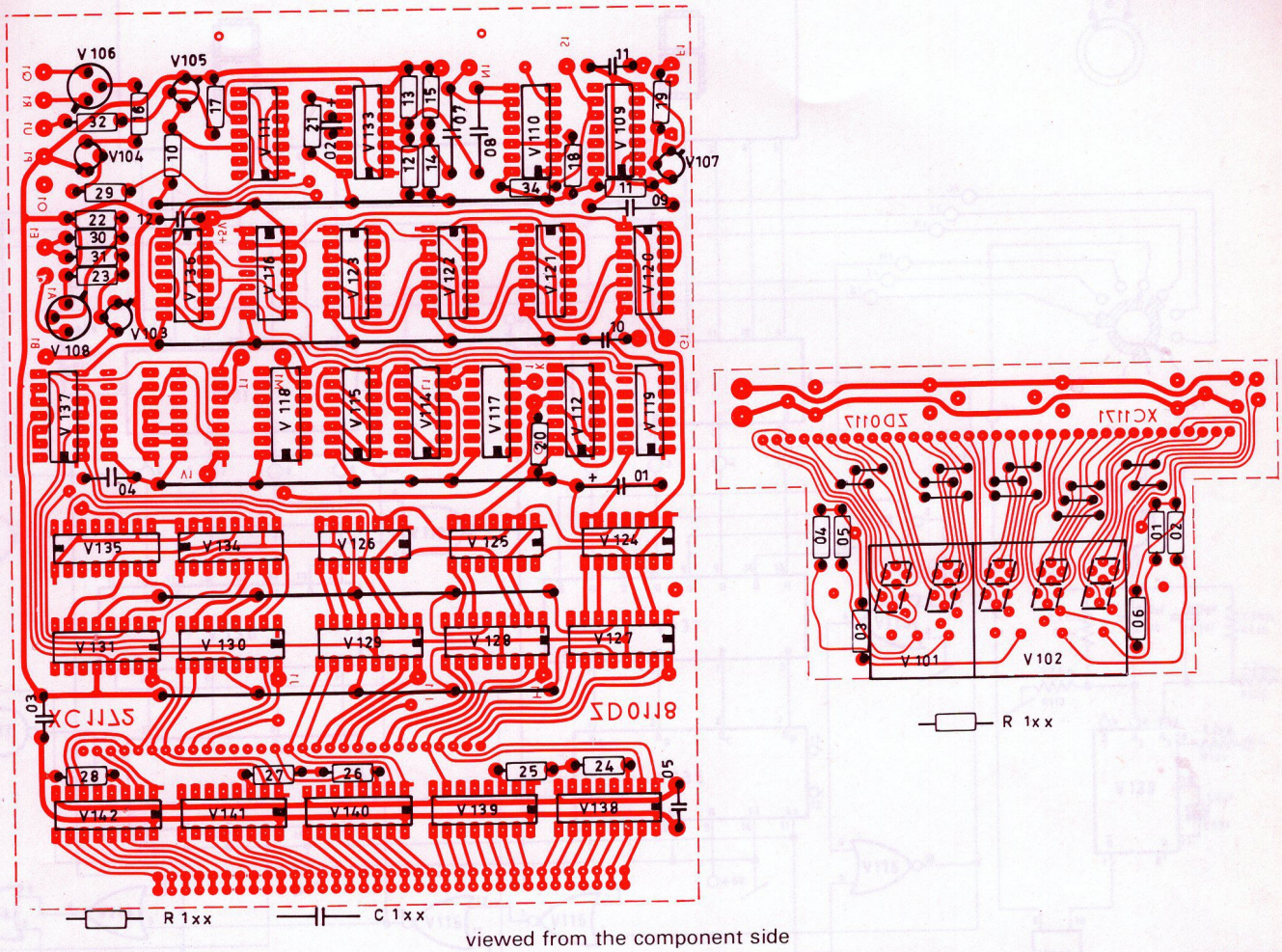

viewed from the component side

CIRCUIT DIAGRAM REF.	COMPONENT TYPE				STOCK REF.
ZD 0118					
C 101	Electrolytic			22 µF/ 25 V	CE 2002
C 102	Tantalum			1,5 µF/ 35 V	CF 0008
C 103-105	Ceramic			47 nF/ 30 V	CK 4470
C 107,108	Polystyrene			620 pF/100 V	CT 1109
C 109	-			220 pF/125 V	CT 0501
C 110-112	Ceramic			47 nF/ 30 V	CK 4470
R 110	Carbon	1/4 W	5 %	1 kΩ	RB 3100
R 111-115	-	-	-	2,2 kΩ	RB 3220
R 116	-	-	-	3,3 kΩ	RB 3330
R 117-120	-	-	-	4,7 kΩ	RB 3470
R 121	-	-	-	8,2 kΩ	RB 3820
R 122,123	-	-	-	12 kΩ	RB 4120
R 124-128	-	-	-	18 kΩ	RB 4180
R 129	-	-	-	27 kΩ	RB 4270
R 130,131	-	-	-	39 kΩ	RB 4390
R 132	-	-	-	47 kΩ	RB 4470
R 133	-	-	-	470 kΩ	RB 5470
R 134	-	-	-	4,7 kΩ	RB 3470
V 103-105	Silicon		NPN	BC 107	VB 0032
V 106	-		PNP	2 N 2905	VB 0059
V 107	-		NPN	BSX 20	VB 0513
V 108	-		-	BF 337	VB 0545

CIRCUIT DIAGRAM REF.	COMPONENT TYPE				STOCK REF.
V 109-112	4 × 2 input NAND gate			SN 7400	VD 0002
V 114,115	4 × 2 input NOR gate			SN 7402	VD 0003
V 116	3 × 3 input NAND gate			SN 7410	VD 0006
V 117,118	2 × 4 input NAND gate			SN 7420	VD 0007
V 119	J-K Flip-Flop			SN 7472	VD 0011
V 120-126	Decade Counter			SN 7490	VD 0013
V 127-131	Bistable Latch			SN 7475	VD 0015
V 133	Monostable Multivibrator			SN 74121	VD 0022
V 134,135	BCD Up/Down Counter			SN 74192	VD 0028
V 136	J-K Flip-Flop			SN 74107	VD 0031
V 137	2-input NAND Buffers			SN 7437	VD 0047
V 138-142	Decoder/driver			DM 8880	VD 0060
	Printed Circuit Board				XC 1172
ZD 0117					
R 101-105	Carbon	1/4 W	5%	2,2 kΩ	RB 3220
R 106	-	-	-	1 MΩ	RB 6100
V 101	2-Digit 7-Segment Display				VA 0097
V 102	3-Digit 7-Segment Display				VA 0098
	Printed Circuit Board				XC 1171

ZD 0117
ZD 0118
1023 from serial no. 523774

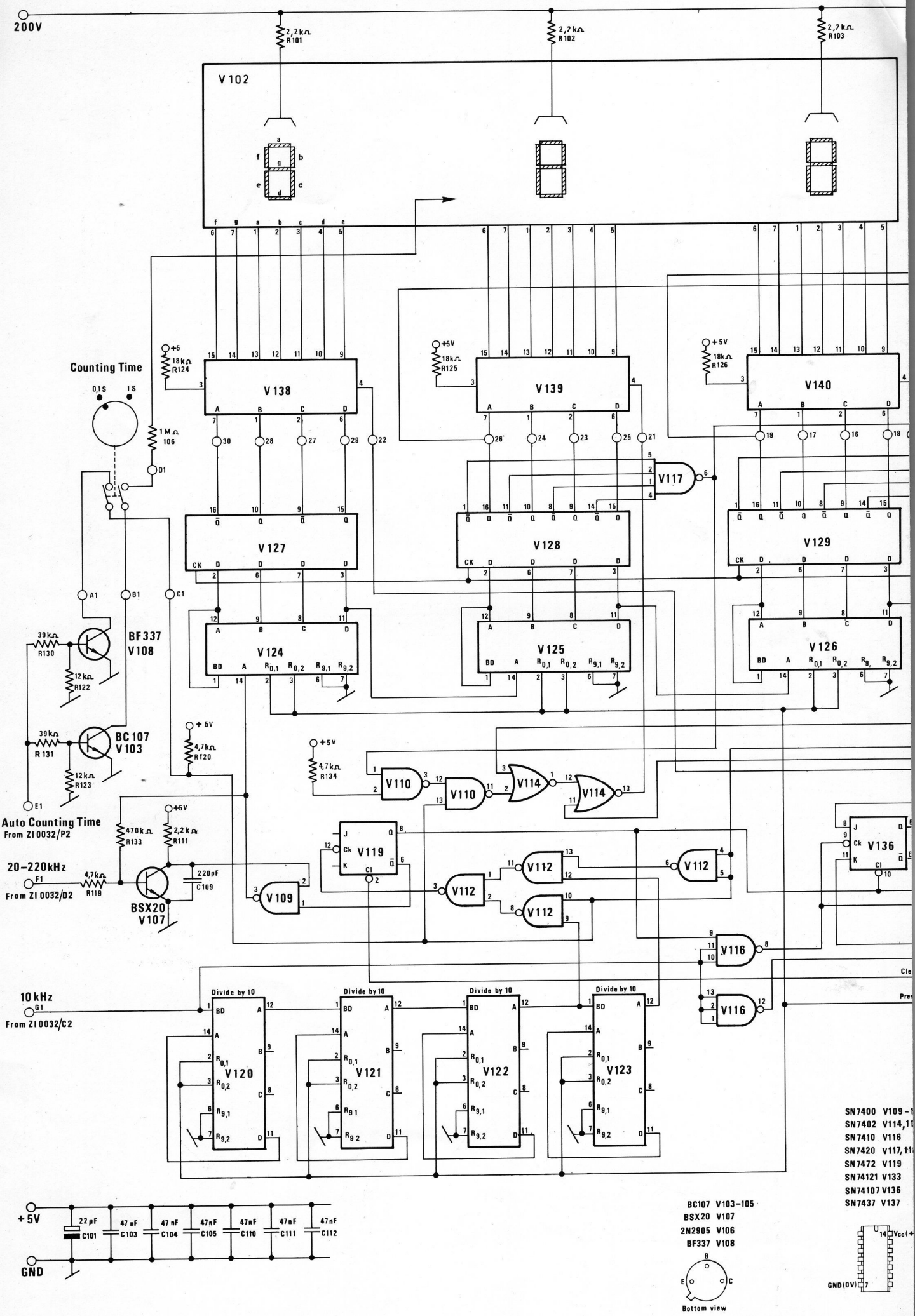
200V
2,2 kΩ R101
2,2 kΩ R102
2,2 kΩ R103
V 102
Counting Time
0,1 S
1 S
1 MΩ 106
D1
+5
18 kΩ R124
+5V
18kΩ R125
18k Ω R126
V 138
V 139
V 140
V 127
V 128
V 129
V 124
V 125
V 126
V117
A1
B1
C1
39kΩ R130
BF337 V108
12kΩ R122
39kΩ R 131
BC 107 V103
12kΩ R123
E1
+ 5V
4,7kΩ R120
+5V
4,7kΩ R134
V110
V110
V114
V114
Auto Counting Time
From ZI 0032/P2
470k Ω R133
2,2 k Ω R111
20–220kHz
F1
From ZI 0032/D2
4,7kΩ R119
220pF C109
BSX20 V107
V119
V109
V112
V112
V112
V112
V136
V116
V116
10 kHz
G1
From ZI 0032/C2
Divide by 10
V120
V121
V122
V123
+5V
22 µF C101
47 nF C103
47 nF C104
47nF C105
47nF C110
47nF C111
47nF C112
GND
SN7400 V109 -
SN7402 V114,11
SN7410 V116
SN7420 V117, 11
SN7472 V119
SN74121 V133
SN74107 V136
SN7437 V137
BC107 V103–105
BSX20 V107
2N2905 V106
BF337 V108
Bottom view
Vcc (+
GND (0V)

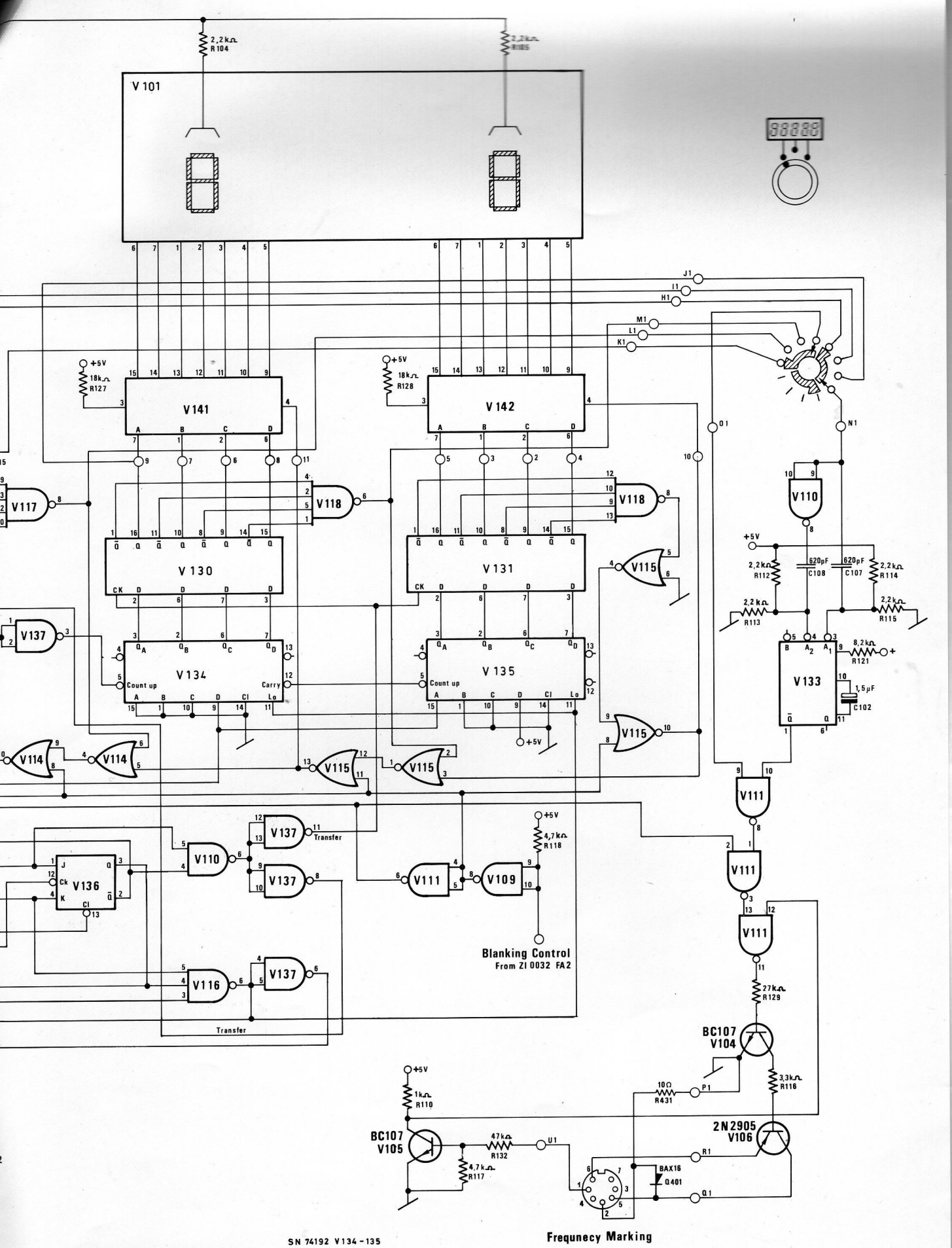

Frequnecy Marking

SN7490 V120-126

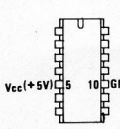

Top view

SN7475 V127-131

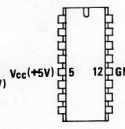

SN 74192 V134-135
DM8880 V138-142

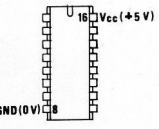

Circuit and Layout Diagrams with Parts List

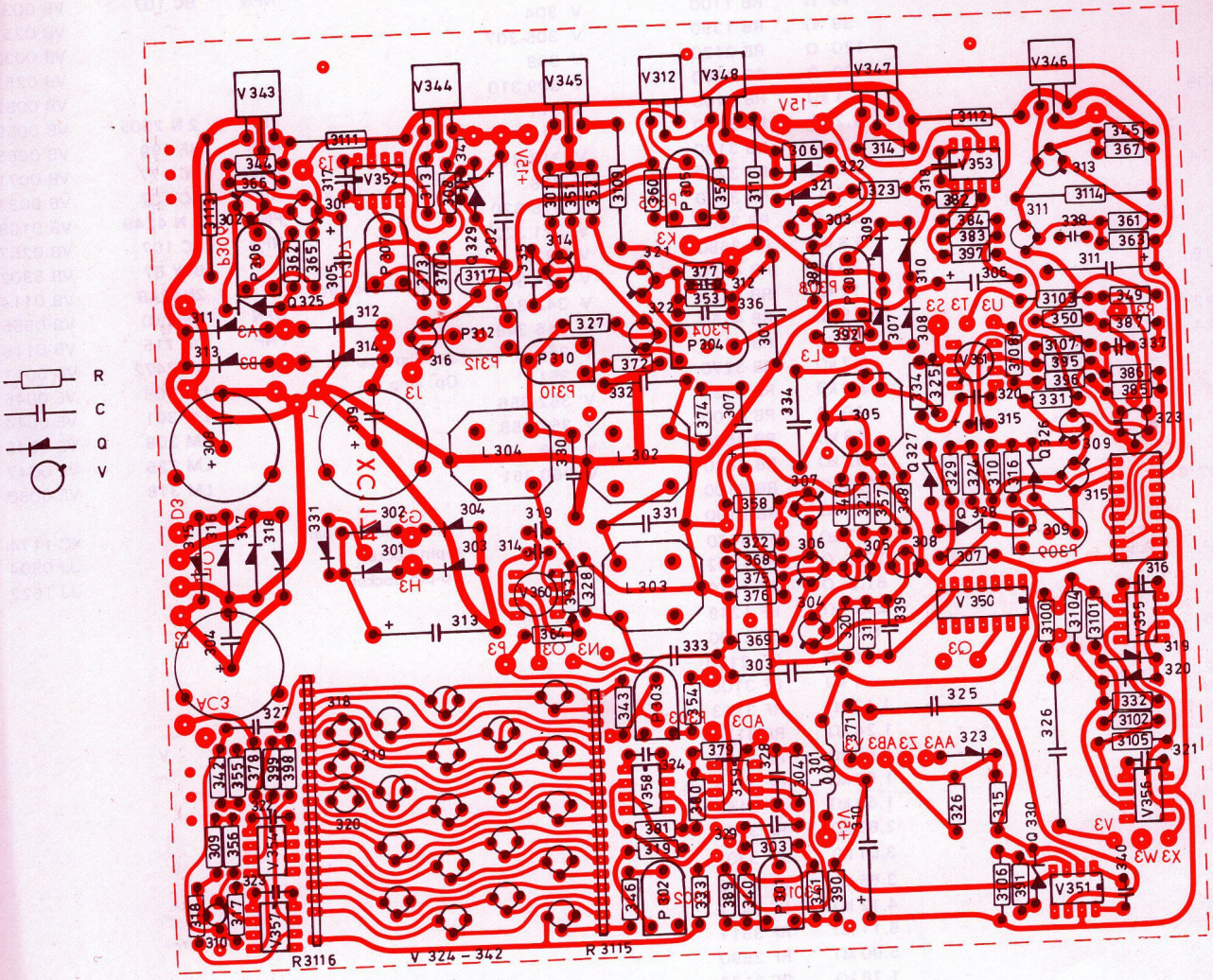

viewed from the component side

C 301	Electrolytic	220 µF/ 6 V	CE 0208
C 302,303	-	100 µF/ 16 V	CE 0310
C 304	-	4700 µF/ 16 V	CE 0336
C 305-307	-	10 µF/ 25 V	CE 0416
C 308,309	-	2200 µF/ 40 V	CE 0433
C 310	-	100 µF/ 40 V	CE 0443
C 311	-	47 µF/ 50 V	CE 8965
C 312	Ceramic	15 pF/400 V	CK 1150
C 313	Electrolytic	1 µF/350 V	CE 0512
C 314,315	Tantalum	1,5 µF/ 35 V	CF 0008
C 316	Ceramic	10 pF/400 V	CK 1100
C 317-319	-	15 pF/400 V	CK 1150
C 320	-	10 pF/400 V	CK 1100
C 321-324	-	33 pF/400 V	CK 1330
C 325	Polycartonate	1 µF/ 50 V	CS 0241
C 326	-	4,7 µF/100 V	CS 0387
C 327,328	-	22 nF/250 V	CS 0400
C 329	-	**47 nF/250 V**	**CS 0401**
C 330	Polystyrene	400 pF/160 V	CT 1011
C 331	-	620 pF/100 V	CT 1109
C 332,333	-	180 pF/125 V	CT 1140
C 334	-	12 nF/ 63 V	CT 1514
C 335,336	-	50 pF/ 63 V	CT 1530
C 337	Trimmer	2,5-5 pF/ 63 V	CV 0033
C 338	Ceramic	3,9 pF/400 V	CK 0390
C 339	Polycarbonate	47 nF/250 V	CS 0401
C 340	Ceramic	33 pF/400 V	CK 1330
C 341	Tantalum	33 µF/ 10 V	CF 0034

L 301	Coil	30 µH	LJ 0008
L 302,303	-	112 mH	LB 0852
L 304	-	52 mH	LB 0851
L 305	Transformer		LB 0853

P 301,302	Trimmer	Cermet	lin.	22 Ω	PG 0222
P 303	-	-	-	100 Ω	PG 1105
P 304	-	-	-	220 Ω	PG 1221
P 305	-	-	-	470 Ω	PG 1509
P 306,307	-	-	-	1 kΩ	PG 2108
P 308	-	-	-	10 kΩ	PG 3109
P 309	-	-	-	22 kΩ	PG 3221
P 310	-	-	-	4,7 kΩ	PG 2470
P 312	-	-	-	470 Ω	PG 1504

Q 301-304	Si.	BYX 10	1200 V/150 mA	QV 0025
Q 307-310	Ge.	AAZ 17	50 V/250 mA	QV 0101
Q 311-318	Si.	1 N 5402	200 V/ 3 A	QV 0212
Q 319,320	-	BAX 16	150 V/300 mA	QV 0217
Q 321-323	-	1 N 4004	400 V/ 1 A	QV 0237
Q 325,326	Zener	1 N 754	6,0-7,5 V/0,4 W	QV 1106
Q 327,328	-	ZM 12	11,4-12,6 V/1 W	QV 1353
Q 329	-	1 N 3155	8,0-8,8 V/0,4 W	QV 1329
Q 330	-	ZF 15	13,8-15,5 V/0,4 W	QV 1325
Q 331	-	ZPD 22	20,8-23,2 V/0,4 W	QV 1348

ZE 0151

1023 from serial no. 739157

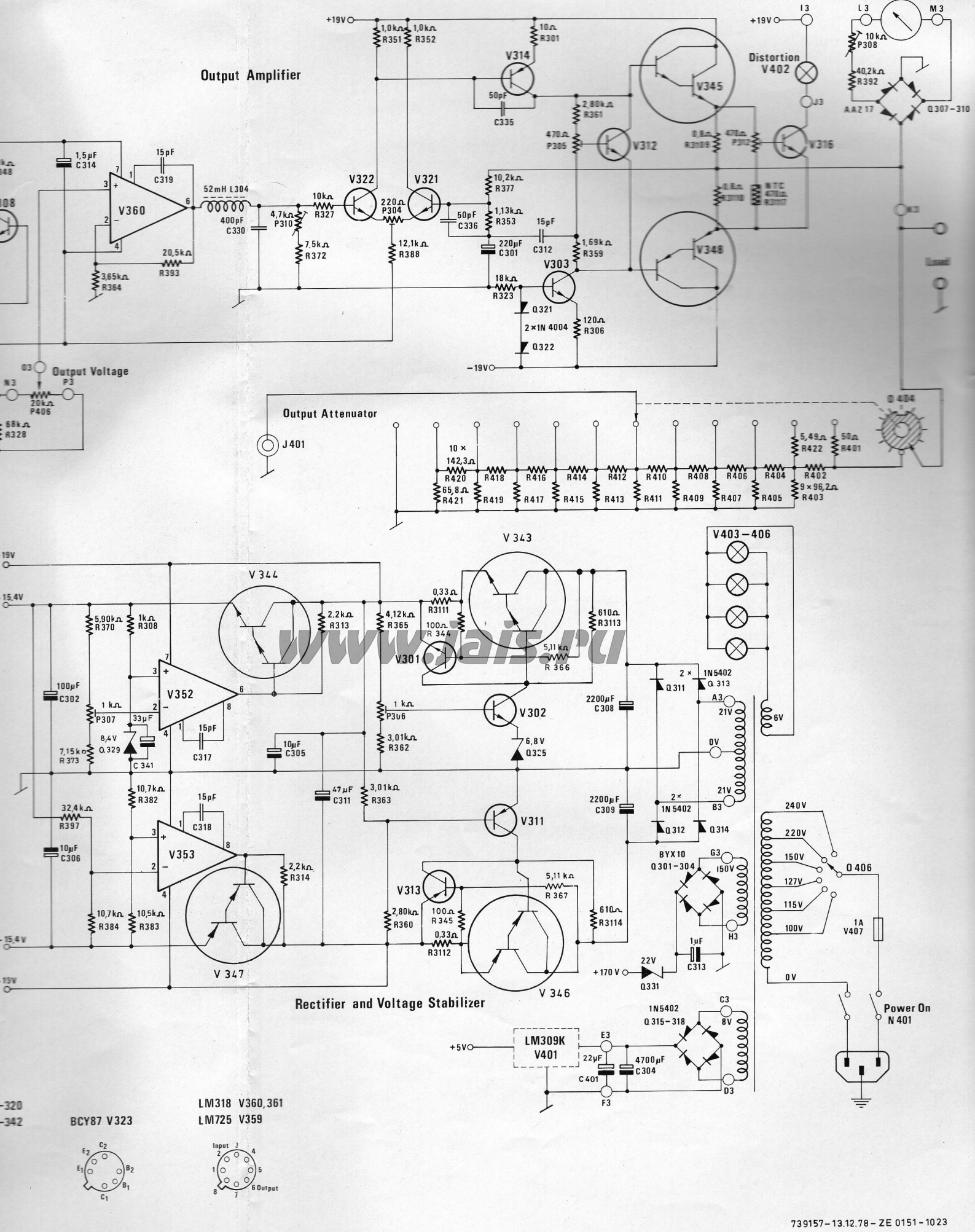
Output Amplifier
Output Voltage
Output Attenuator
Rectifier and Voltage Stabilizer
Distortion
V402
V360
V322
V321
V314
V345
V312
V316
V348
V303
V344
V343
V352
V301
V302
V353
V311
V313
V347
V346
V403–406
Q 404
Q 406
Q 307–310
AAZ 17
BYX10
Q301–304
1N5402
Q315–318
LM309K
V401
Power On
N 401
1A
V407
BCY87 V323
LM318 V360, 361
LM725 V359
Input
Output
+19V
-19V
+5V
+170 V
-15,4V
-19V
-320
-342
739157–13.12.78–ZE 0151–1023

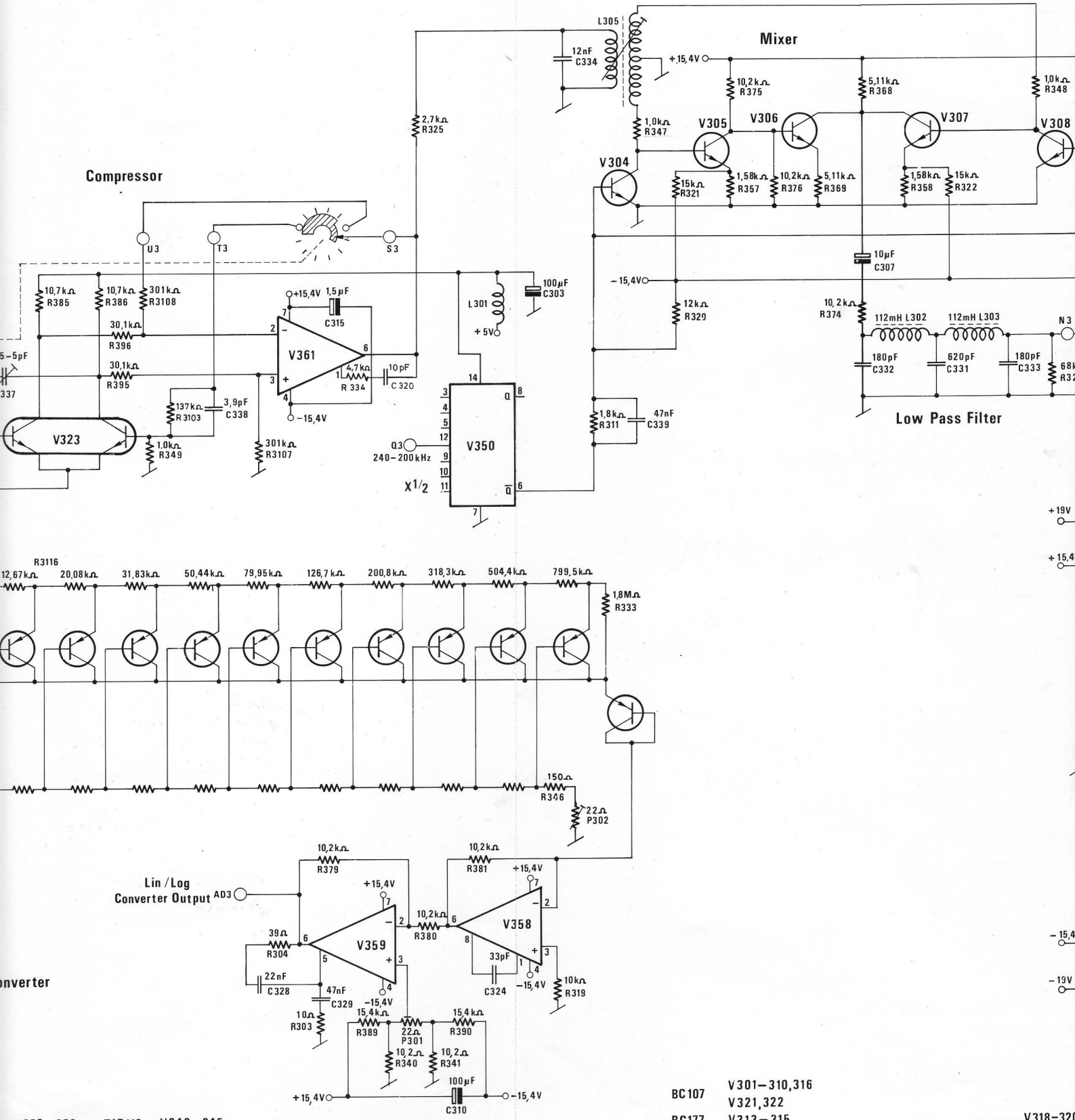

V352-356 TIP110 V343-345
V351,357,358 TIP115 V346-348

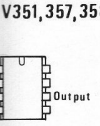

op view

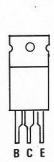

BC107 V301-310,316
V321,322
BC177 V313-315
2N2905 V311

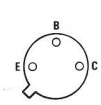

BF199 V312

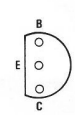

2N4249 V318-320
V324-342

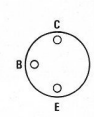

Bottom view

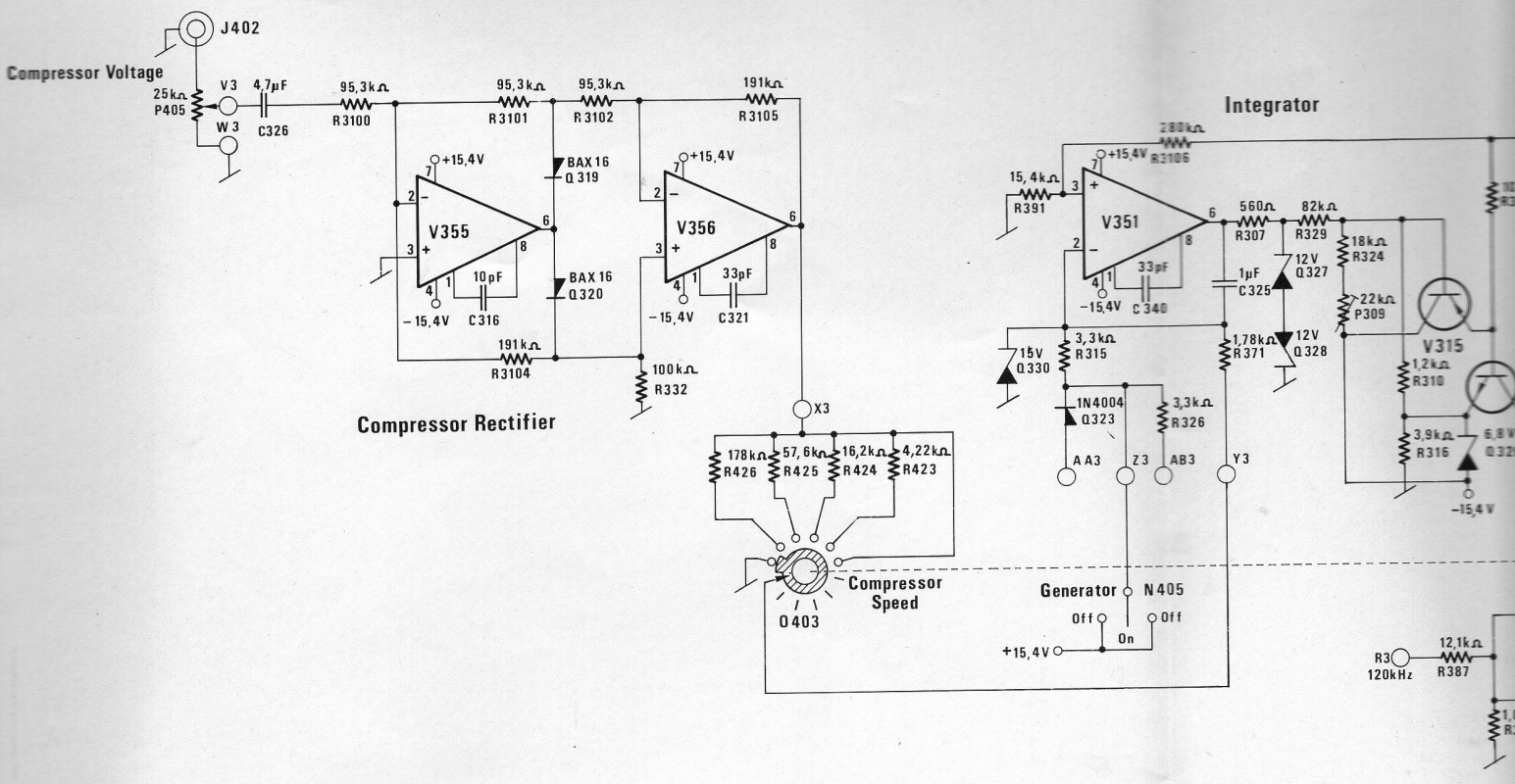
J402
Compressor Voltage
25kΩ P405
V3
W3
4,7µF C326
95,3kΩ R3100
95,3kΩ R3101
95,3kΩ R3102
191kΩ R3105
+15,4V
V355
V356
BAX 16 Q319
BAX 16 Q320
10pF C316
33pF C321
−15,4V
191kΩ R3104
100kΩ R332
Compressor Rectifier
X3
178kΩ R426
57,6kΩ R425
16,2kΩ R424
4,22kΩ R423
Q403
Compressor Speed
Integrator
280kΩ R3106
15,4kΩ R391
V351
560Ω R307
82kΩ R329
18kΩ R324
12V Q327
33pF
1µF C325
C340
22kΩ P309
V315
1,2kΩ R310
3,3kΩ R315
15V Q330
1,78kΩ R371
12V Q328
1N4004 Q323
3,3kΩ R326
3,9kΩ R316
A A3
Z3
AB3
Y3
Generator
N405
Off
On
+15,4V
R3 120kHz
12,1kΩ R387

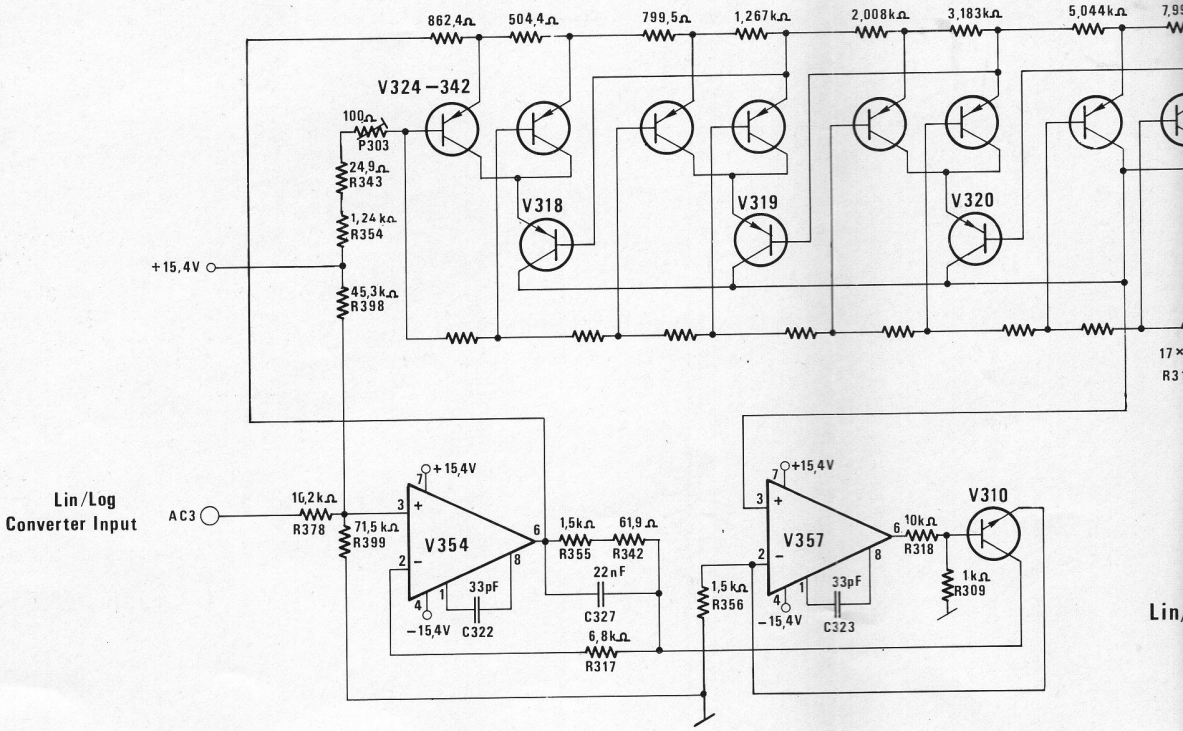
862,4Ω
504,4Ω
799,5Ω
1,267kΩ
2,008kΩ
3,183kΩ
5,044kΩ
V324 −342
100Ω P303
24,9Ω R343
1,24kΩ R354
45,3kΩ R398
+15,4V
V318
V319
V320
Lin/Log Converter Input
AC3
16,2kΩ R378
71,5kΩ R399
V354
33pF C322
1,5kΩ R355
61,9Ω R342
22nF C327
6,8kΩ R317
V357
33pF C323
10kΩ R318
V310
1kΩ R309
1,5kΩ R356

SN7472 V350

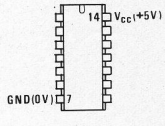
14
VCC(+5V)
GND(0V)
7

R 301	Carbon	1/4 W	5%	10 Ω	RB 1100
R 303	-	-	-	10 Ω	RB 1100
R 304	-	-	-	39 Ω	RB 1390
R 306	-	-	-	120 Ω	RB 2120
R 307	-	-	-	560 Ω	RB 2560
R 308,309	-	-	-	1 kΩ	RB 3100
R 310	-	-	-	1,2 kΩ	RB 3120
R 311	-	-	-	1,8 kΩ	RB 3180
R 313,314	-	-	-	2,2 kΩ	RB 3220
R 315	-	-	-	3,3 kΩ	RB 3330
R 316	-	-	-	3,9 kΩ	RB 3390
R 317	-	-	-	6,8 kΩ	RB 3680
R 318,319	-	-	-	10 kΩ	RB 4100
R 320	-	-	-	12 kΩ	RB 4120
R 321,322	-	-	-	15 kΩ	RB 4150
R 323,324	-	-	-	18 kΩ	RB 4180
R 325	-	-	-	2,7 kΩ	RB 3270
R 326	-	-	-	3,3 kΩ	RB 3330
R 327	-	-	-	10 kΩ	RB 4100
R 328	-	-	-	68 kΩ	RB 4680
R 329	-	-	-	82 kΩ	RB 4820
R 331,332	-	-	-	100 kΩ	RB 5100
R 333	-	-	10%	1,8 MΩ	RB 6180
R 334	-	-	5%	4,7 kΩ	RB 3470
R 340,341	Metal	-	1%	10,2 Ω	RF 1102
R 342	-	-	-	61,9 Ω	RF 1619
R 343	-	-	-	24,9 Ω	RF 1249
R 344,345	-	-	-	100 Ω	RF 2100
R 346	-	-	-	150 Ω	RF 2150
R 347-352	-	-	-	1 kΩ	RF 3100
R 353	-	-	-	1,13 kΩ	RF 3113
R 354	-	-	-	1,24 kΩ	RF 3124
R 355,356	-	-	-	1,50 kΩ	RF 3150
R 357,358	-	-	-	1,58 kΩ	RF 3158
R 359	-	-	-	1,69 kΩ	RF 3169
R 360,361	-	-	-	2,80 kΩ	RF 3280
R 362,363	-	-	-	3,01 kΩ	RF 3301
R 364	-	-	-	3,65 kΩ	RF 3365
R 365	-	-	-	4,12 kΩ	RF 3412
R 366-369	-	-	-	5,11 kΩ	RF 3511
R 370	-	-	-	5,90 kΩ	RF 3590
R 371	-	-	-	1,78 kΩ	RF 3178
R 372	-	-	-	7,50 kΩ	RF 3750
R 373	-	-	-	7,15 kΩ	RF 3715
R 374-381	-	-	-	10,2 kΩ	RF 4102
R 382	-	-	-	10,7 kΩ	RF 4107
R 383	-	-	-	10,5 kΩ	RF 4105
R 384-386	-	-	-	10,7 kΩ	RF 4107
R 387,388	-	-	-	12,1 kΩ	RF 4121
R 389-391	-	-	-	15,4 kΩ	RF 4154
R 392	-	-	-	40,2 kΩ	RF 4402
R 393	-	-	-	20,5 kΩ	RF 4205
R 395,396	-	-	-	30,1 kΩ	RF 4301
R 397	-	-	-	32,4 kΩ	RF 4324
R 398	-	-	-	45,3 kΩ	RF 4453
R 399	-	-	-	71,5 kΩ	RF 4715
R 3100-02	-	-	-	95,3 kΩ	RF 4953
R 3103	-	-	-	137 kΩ	RF 5137
R 3104,05	-	-	-	191 kΩ	RF 5191
R 3106	-	-	-	280 kΩ	RF 5280
R 3107,08	-	-	-	301 kΩ	RF 5301
R 3109,10	Wire	1 W	5%	0,8 Ω	RO 1103
R 3111,12	-	2 W	10%	0,33 Ω	RO 1220
R 3113,14	-	3 W	5%	610 Ω	RX 0323
R 3115	Thick film				RZ 0024
R 3116	-				RZ 0025
R 3117	NTC	0,5 W		470 Ω	RN 0015

V 301-303	Silicon	NPN	BC 107	VB 0032
V 304	-	-	-	VB 0257
V 305-307	-	-	-	VB 0032
V 308	-	-	-	VB 0257
V 309,310	-	-	-	VB 0032
V 311	-	PNP	2 N 2905	VB 0059
V 312	-	NPN	BF 199	VB 0065
V 313-315	-	PNP	BC 177	VB 0071
V 316	-	NPN	BC 107	VB 0032
V 318-320	-	PNP	2 N 4249	VB 0108
V 321,322	-	NPN	BC 107	VB 0257
V 323	-	-	BCY 87	VB 5302
V 324-342	- (Matched set)	-	**2N4249**	VB 0114
V 343-345	-	NPN	TIP 110	VB 0555
V 346-348	-	PNP	TIP 115	VB 0115
V 350	J-K Flip-Flop		SN 7472	VD 0011
V 351	Op. amp.		LM 308	VE 0046
V 352-356	- -		LM 301	VE 0044
V 357,358	- -		LM 308	VE 0046
V 359	- -		LM 725	VE 0047
V 360,361	- -		LM 318	VE 0050

Printed Circuit Board	XC 1174
8-pin Socket	JJ 0804
16-pin Socket	JJ 1622

Circuit and Layout Diagrams with Parts List

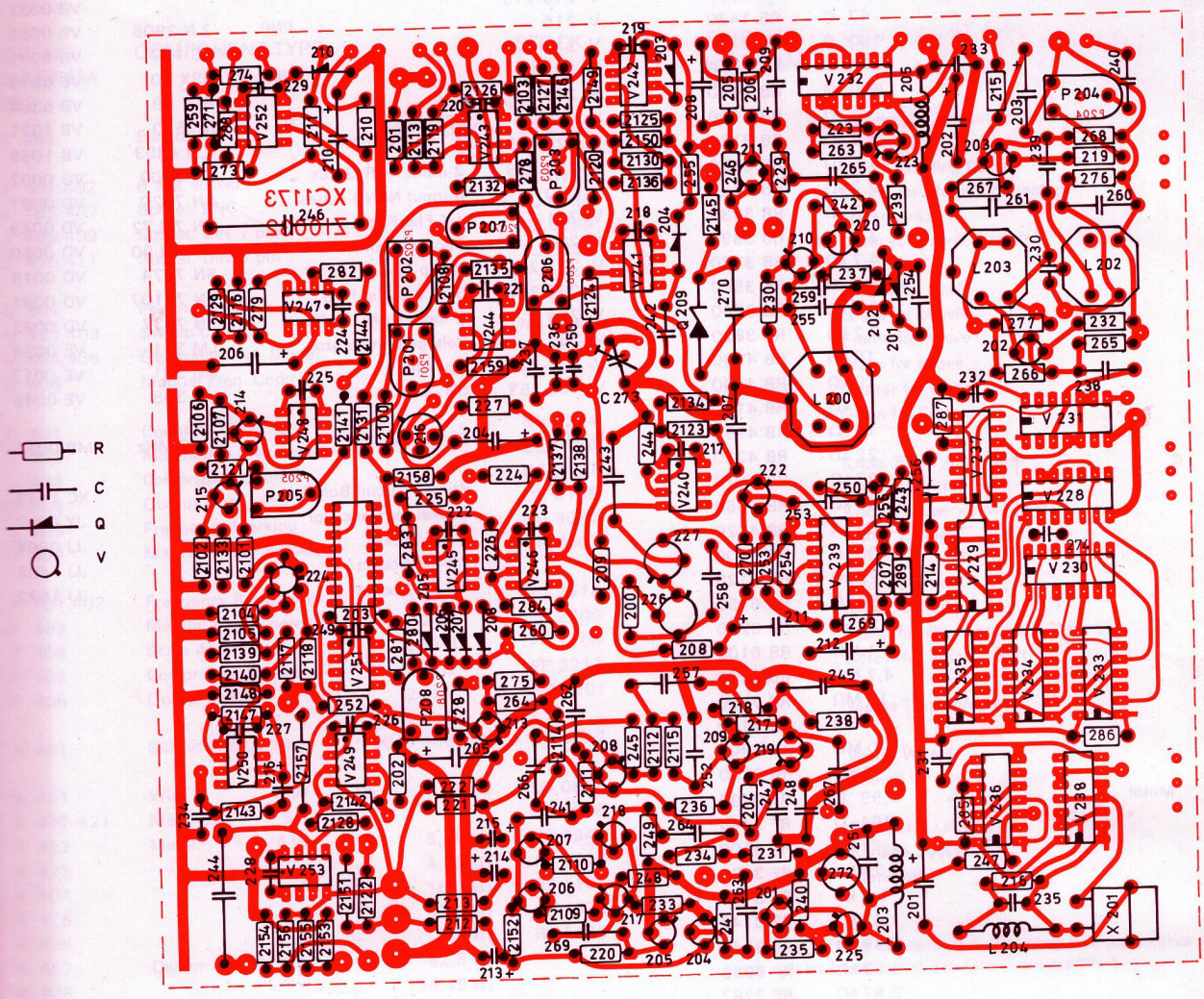

viewed from the component side

C 201-212	Electrolytic	22 µF/ 25 V	CE 2002
C 213-216	Tantalum	22 µF/ 16 V	CF 0031
C 217-229	Ceramic	33 pF/400 V	CK 1330
C 230	-	6,8 pF/400 V	CK 0681
C 231-234	-	47 nF/ 12 V	CK 4471
C 235	-	30 pF/400 V	CK 0105
C 236	-	4 pF/400 V	CK 0097
C 237	Mica	450 pF/350 V	CM 0004
C 238-240	Polycarbonate	10 nF/250 V	CS 0394
C 241	-	100 nF/100 V	CS 0409
C 242	-	220 nF/100 V	CS 0389
C 243	-	1 µF/100 V	CS 0384
C 244	Polystyrene	1 µF/ 50 V	CS 0241
C 245	Polycarbonate	470 nF/100 V	CS 0383
C 246	-	10 µF/ 63 V	CS 0399
C 247,248	-	47 nF/250 V	CS 0401
C 249	Ceramic	33 pF/400 V	CK 1330
C 250	-	30 pF/400 V	CK 0502
C 251	Polystyrene	92 pF/ 63 V	CT 1550
C 252-255	-	100 pF/125 V	CT 1133
C 256-258	-	220 pF/125 V	CT 1141
C 259	-	250 pF/100 V	CT 1117
C 260,261	-	560 pF/ 63 V	CT 1122
C 262	-	402 pF/100 V	CT 1115
C 263-265	-	470 pF/100 V	CT 1111
C 266, 267	Polystyrene	1 nF/ 63 V	CT 1170
C 269	-	4,7 nF/ 63 V	CT 1508
C 270	-	22 nF/ 63 V	CT 1517
C 271	Ceramic	12 pF/400 V	CK 0095
C 272	Trimmer	5-25 pF/ 50 V	CV 0025
C 273	-	1,5-3,5 pF/500 V	CV 0021
C 274	Ceramic	33 pF/400 V	CK 1330
		-	LB 0707
L 200	Coil		LB 0769
L 202,203	-	30 µH	LJ 0008
L 204	Filter Choke	6 µH	LJ 0010
L 205	- -	160 µH	LJ 0016
L 206	- -		

P 201	Trimmer	Cermet	lin.	22 Ω	PG 0222
P 202	-	-	-	100 Ω	PG 1105
P 203	-	-	-	500 Ω	PG 1510
P 204, 205	-	-	-	1 kΩ	PG 2108
P 206	-	-	-	22 kΩ	PG 3221
P 207	-	-	-	100 Ω	PG 1105
P 208	-	-	-	22 kΩ	PG 3221

Q 201-208	Silicon	1 N 4148	75 V/ 75 mA
Q 209	VDC	1 N 3023	QV 1332
Q 210	Silicon	1 N 4148	75 V/ 75 mA